City of Fountain
*Pure Colorado*

**CITY COUNCIL AGENDA**
**MAY 24, 2016 – 6:00 P.M.**
**116 SOUTH MAIN STREET**

**All Times Listed are Estimates. At the Discretion of the Mayor and Council Times May be Adjusted.**

**1) Call to Order**

**2) Pledge of Allegiance**

**3) Roll Call**

**4) (A) Presentations:**

- Pikes Peak Range Riders, and Pikes Peak or Bust Rodeo, Girls of the West

**4) (B) Board/Commission/Committee Appointments**

**5) City Council Agenda Requests and Announcements**

**6) Public to be Heard**

Citizens may address the Council on items that are not on the agenda. Please sign up with the City Clerk prior to the meeting. Council may not be able to provide an immediate answer, but will direct staff to follow-up. Out of respect for the Council and others in attendance, please limit your comments to three (3) minutes or less.

**7) Consent Agenda**

Note: All items listed under the Consent Agenda are considered to be routine and will be approved with one motion. There will be no separate discussion of these items unless a Council Member or citizen so requests, in which case the item may be removed from the Consent Agenda and considered separately, at the discretion of Council. (**Est. time-3 min**)

***A.*** Approval of the May 10, 2016 City Council Meeting Minutes
***B.*** 2016 Procurement of a Tandem Dump Truck for the Water Department in the Amount of $119,658.00.
***C.*** Approve Bid for City Hall Security Improvements to Ransom Construction, in the Amount of up to $90,000
***D.*** A Resolution Acknowledging Forfeiture of any Interest the City may have in an Indenture Recorded in 1925 in El Paso County Colorado at Reception No. 38835

## 8) Old Business

***A.*** Second Reading of Ordinance 1673, An Ordinance Repealing The (2012) Emergency Operations Plan And Adopting By Reference The 2016 City Of Fountain Emergency Operations Plan In Accordance With Chapter 2.36.050 Of The Fountain Municipal Code (Luchia Tingley)**(Est. Time. 1 Min)**

## 9) New Business

***A.*** Consideration of Items Removed from the Consent Agenda **(Est. Time 5 Min)**

***B.*** First Reading Of Ordinance 1674, An Ordinance Of The City Of Fountain, Colorado Approving The Issuance Of Its Water Revenue Refunding Bonds, Series 2016, For The Purpose Of Refinancing The City's 2008 Loan With The Colorado Water Resources & Power Development Authority (CWRPDA), Funding The Reserve Account, And Paying The Cost Of Issuance Of The Bonds; Authorizing The Forms Of Such Bonds And Other Details With Respect To Such Bonds And The Payment Thereof; Providing For Payment Of The Bonds From A Portion Of The Revenues Of The City's Electric, Water And Wastewater Utility Enterprise And Making Certain Covenants In Connection Therewith; And Providing Details In Connection With The Bonds (Don Yucuis)**(Est. Time 15 min.)**

***C.*** Resolution No. 16-017, A Resolution Of The City Of Fountain Creating The Recreation Facility Committee, Providing For Its Duties And Responsibilities And Authorizing (Scott Trainor)**(Est Time 5 min.)**

## 10) Correspondence, Comments and Ex-Officio Reports

## 11) Announcement of Executive Sessions

In accordance with the City Charter and the Colorado Open Meetings Act, the City Council open session is to determine whether it will hold a Closed Executive Session. A Closed Executive Session may be held upon an affirmative vote of two-thirds of the quorum present. If consent to the closed Executive Session is not given, the items may be discussed in open session or withdrawn from consideration.

## 12) Adjourn

**A (Administrative Action)** **QJ (Quasi-Judicial Action)** **L (Legislative Action)**

**NEXT REGULAR COUNCIL MEETING**
**JUNE 14, 2016**

Posting Date:

# Regular City Council Meeting

**Consent – 7A**

***Council Meeting Minutes***

*May 24, 2016*

## *Summary Information*

Title:
Approval of the May 10, 2016 City Council Meeting Minutes

| | |
|---|---|
| Initiator : City Clerk | ☒ Council Action |
| Presenter: Silvia Huffman, City Clerk | ☐ Council Information |
| Legal Review: ☐ Yes ☐ No | ☐ Report to Council |

Summary Overview and List of Attachments:

The attached minutes were compiled as the result of the April 26, 2016 City Council Meeting Minutes

Attachments: May 10, 2016 City Council Meeting Minutes

## *Background Information*

N/A

## *Recommendation*

Approve the May 10, 2016 City Council Meeting Minutes

## *Proposed Motion*

Motion to approve shall be included under the consent agenda.

CM Review

# CITY COUNCIL MEETING
## May 10, 2016

### 1) Call to Order

Mayor Ortega called the meeting to order at 6:00 P.M.

### 2) Pledge of Allegiance

The Pledge of Allegiance was recited.

### 3) Roll Call

Roll call found the following members present:

Mayor Ortega
Mayor Pro Tem Thomas
Council Member Thompson
Council Member Gieck
Council Member Applegate

Council Member Lauer and Coke notified staff of his absence.

### 4)(A) Special Presentations & Declarations:

**Award of Youth Park Board Scholarships to Breanna Sisson and Arielle Stanley**

Park Board Chair Susan Kircher presented Ms. Sisson and Ms. Stanley with a $500 scholarship and thanked them for their volunteer time on the Youth Park Board.

**FY 2016 1st Quarter Financial Report Update**

Finance Director Yucuis reviewed the general fund revenue and expenditure reports; GID #1&2; street capital sales tax; transportation sales tax; street resurfacing; water; electric; and ambulance funds. He noted all funds are in line with what was projected.

### 4)(B) Board/Commission/Committee Appointments

There were no appointments.

### 5) City Council Agenda Requests and Announcements

Council Member Thompson asked for an update on the railroad quiet zones and the proposed free bus service for students. She also requested a Council agenda item in June to discuss if the

city wants to continue membership with the Colorado Springs Business Alliance since they are supposed to be neutral within it organization and they opted to lobby against House Bill 1303. She also asked about funding for the move of Crest Mobile Home Park residents.

City Manager Trainor reported that final approval was done with the PUC and additional approvals would be done this fall to begin construction in the Spring of 2017. He updated Council on the process with HB 1303 noting there is still litigation with this item and the City may want to consider bringing it back to legislation since this would affect the City in the future. He stated the Colorado State Housing Board began the approval process to help move residents from the Crest Mobile Home Park and would notify students of the free bus passes available for the summer.

It was the consensus of Council to discuss the Colorado Business Alliance at a June Council meeting.

Chief Heberer stated the community event that was postponed has been rescheduled for May 14th from 10 a.m-3 p.m. at Metcalfe Park.

**6) Public to be Heard**

Mr. Gonzales, VFW, updated Council on upcoming events and programs available.

Deborah Stout-Meininger, resident noted the issues and concerns with fracking and wind turbines in the County.

Al Lender, REA Road, reported on the increase of commercial vehicle traffic on Ohio Avenue causing road damage. He also stated there will be a motorcycle ride through Fountain as a "Ride for the Wall" on May 21st.

City Clerk Huffman reported that she is currently working with the City Attorney to establish a truck route and weight limit within the city limits.

Mayor Ortega updated the public on the success of the Ride for Heroes.

**7) Consent Agenda**

- ***A.*** **Approval of the April 26, 2016 City Council Meeting Minutes**
- ***B.*** **Resolution 16-016, A Resolution Encouraging Voluntary Water Restrictions.**
- ***C.*** **Corporate Report of Changes for Apple Colorado LLC DBA as Applebee's Neighborhood Grill & Bar. Located at 6428 S. Hwy 85/87.**

Mayor Pro Tem Thomas made a motion to approve the consent agenda, seconded by Council Member Gieck. All members voted yes (5-0); the motion carried.

**8) Old Business**

***A.* Second Reading of Ordinance No. 1672, An Ordinance Approving a Change in Zoning from Business Park District (BP) and Small Office/Warehouse District (SO) to Regional Commercial District (RC) for the Fountain Industrial Park, Generally Located on the South Side of Mesa Ridge Parkway between State Highway 85 and Fountain Mesa Road and Hereinafter More Specifically Described in Exhibit "A" and "B"**

Planning Supervisor Martinez reported there have been no changes to this ordinance since first reading.

Council Member Gieck made a motion to approve Ordinance 1672 on second reading, seconded by Mayor Pro Tem Thomas. All members voted yes (5-0); the motion carried.

**9) New Business**

***A.* Consideration of Items Removed from the Consent Agenda**

There were no items removed.

***B.* First Reading of Ordinance 1673, An Ordinance Repealing The (2012) Emergency Operations Plan And Adopting By Reference The 2016 City Of Fountain Emergency Operations Plan In Accordance With Chapter 2.36.050 Of The Fountain Municipal Code**

Communication Supervisor Tingley stated this plan has been updated and sent to Council in February for review and is now ready for consideration.

Council Member Thompson made a motion to approve Ordinance 1673 on first reading, seconded by Mayor Pro Tem Thomas. All members voted yes (5-0); the motion carried.

***C.* Approval and Signature Of The Apparatus Purchase Agreement Between The City Of Fountain And Rosenbauer, LLC**

Fire Chief Anstine reported on the selection process with a committee. He reviewed all criteria used to determine the selection of a purchase of a new fire truck.

Mayor Pro Tem Thomas asked about trading in the existing fire truck.

Chief Anstine stated the truck will be turned over to Rosenbauer and they will handle the resale of the truck. Proceeds will go toward the purchase of this new truck.

Council Member Gieck expressed his concerns with the high cost of the truck stating that money could be saved.

Council Member Thompson reported that she sat on the committee to review the best option for a fire truck. She noted that the Fleet Department felt it was best to continue with the same make of vehicle as they are already trained and could easily get parts if needed.

Public Safety Chief Heberer stated this was the best process for determining the best options. He reported that the decision to purchase a new truck is the best decision for the city.

Council Member Thompson made a motion to approve the purchase, seconded by Council Member Applegate. All members except Council Member Gieck voted yes (4-1); the motion carried.

**10) Correspondence, Comments and Ex-Officio Reports**

City Manager Trainor reported that he had sent an email to Council to clarify the last amendments to the RV ordinance that will come back to Council on June 28. He stated that an ordinance will be drafted with those amendments.

Council Member Gieck explained his no vote in that he wants a new fire truck but did not want to pay that $500k for it.

Mayor Ortega reported on his visit to see the new fire global super tanker at the Colorado Springs Airport. They have been unable to send this equipment to Canada for help as they are still working on getting approvals from the FAA.

**11) Announcement of Executive Sessions**

There were no executive sessions requested.

**12) Adjourn**

There being no further business Mayor Ortega declared the meeting adjourned at 7:27 P.M.

City Clerk

Mayor

# Regular City Council Meeting

**Consent –7B**

*May 24, 2016*

## Summary Information

Title:
2016 Procurement of a Tandem Dump Truck for the Water Department in the Amount of $119,658.00.

| | |
|---|---|
| Initiator: Ron Woolsey, Water Department Superintendent | ☒ Council Action |
| Presenter: Ron Woolsey, Water Department Superintendent | ☐ Council Information |
| Legal Review: ☐ Yes ☒ No | ☐ Report to Council |

Summary Overview and List of Attachments:
This vehicle is in the Five Year Capital Plan. Funds were approved for this purchase in the 2015/2016 budget process and are available. The purpose of this action item is for the Council to approve the purchase of a Tandem Dump Truck for the Water Department. This dump truck would be used for hauling road base gravel, mud and asphalt from water breaks. Total cost to purchase the Tandem Dump Truck is $119,658.00

Attachments: None

## Background Information

Currently, the Water Department is utilizing two older dump trucks, both of which are reaching their life expectancy. The addition of the tandem dump truck to our fleet would expedite repair operations during water leaks, reducing wait times when hauling mud or road base. The Water Department dump trucks also supplement the Street Department's need for hauling gravel and use during the City Clean-up Program. The following formal bids were received:

| Vendor | Bid Submittal |
|---|---|
| Mac – Diesel 345 hp. | $113,823.00 |
| McCandless International – Diesel 370 hp. | $117,233.33 |
| Transwest Freightliner – Diesel 370 hp. | $119,658.00 |

Note: Transwest is located in the City of Fountain and within the City's Purchasing Policy 2.4.4.C that allows a 5% preference that would qualify as low bid.

## Recommendation

It is the recommendation of the Water Department, Fleet Manager, and Fleet Superintendent for the City Council to approve the purchase of a new Transwest Freightliner Tandem Dump Truck with all of the options based on the following factors:

- Superior motor and availability of repair parts
- Local service company (Transwest).
- Transwest Freightliner meets all of the specifications required.
- The Water Department has worked with this vendor before and has been satisfied with previous equipment from this vendor.

## Proposed Motion

"I recommend the approval of the purchase of a Transwest Freightliner 370 hp. Tandem Dump Truck as set forth by the Water Superintendent and City Manager in the amount of $119,658.00."

CM Review

# Regular City Council Meeting

**Consent –7C**

City Hall Security Improvements

*May 24, 2016*

## Summary Information

Title: **Approval of Bid for Security Improvements at City Hall in an amount not to exceed $80,000.**

| | |
|---|---|
| Initiator : Scott Trainor, City Manager | ☒ Council Action |
| Presenter: Scott Trainor, City Manager | ☐ Council Information |
| Legal Review: ☐ Yes ☒ No | ☐ Report to Council |

Summary Overview and List of Attachments:

This agenda item is for the Council's approval to accept a bid for the construction of security improvements at City Hall.

## Background Information

During the March 29, 2016 Council meeting, the City Council authorized the City Manager to obtain bids for the construction of Security Improvements at City Hall. The Council approved moving forward with a project to restrict access to back office space and create a cashier-like window at receptionist areas, similar to customer service at 101 North Main. This option, shown in attached sketch drawings, provided the most cost-effective solution that would also allow us a greater degree of personal interaction with customers while also providing for security.

Bids were received on the project from both T-Bone Construction and Ransom Construction as follows:

| | |
|---|---|
| T-Bone | $63,120 |
| Ransom Construction | $85,713 |

## Recommendation

The recommendation is to approve the Bid for the project to T-Bone Construction, in an amount not to exceed $80,000. This would include $13,000 for an additional alternate to include heavier grade glass.

## Proposed Motion

Since this is a consent agenda item, no motion is provided.

_____

CM Review

City of Fountain
116 South Main Street
Fountain, Colorado 80817

## Pricing Proposal

**T-Bone Construction, Inc.**
1310 Ford Street
Colorado Springs, CO 80915
Phone: (719) 570-1456
Fax (719) 591-5217

May 13, 2016 Re: Security Improvements
Attention: Scott Trainor

Proposal: **Provide Construction Services for the Installation of Security Improvements.** We propose to provide labor, material and equipment to perform the scopes of services as describe by Mr. Trainor, specifications given, and detailed below.

**Management** $977
Project Manager, Project Superintendent, Administration, Continuous and Final Clean Up

**Doors and Glass** $62,143
5 New Door Frames, Doors and Hardware
Bullet Resistant Glass at Joney's Office, City Clerk, Court Office and Admin Counter
Note: Frames, Doors and Associated Glass, Other Than Mentioned Above, is NOT Bullet Resistant
Electric for Door Strikes is Included From Existing Panel and Breakers
(assuming panel is reasonably close and breakers available)
All Materials Proposed per Specifications and Layout Shown in Drawings Provided.

**Total Project.....$63,120**

**EXCLUSIONS:**

- **Temporary utilities are not considered (i.e. restrooms, electric, etc.)**
- **Architectural, engineering, and permit are not included**
- **Exclude any and all abatement of hazardous materials, disposal of contaminated materials.**
- **Items not mentioned in this proposal are not included.**

Thank you for the opportunity, please let us know if you have any questions or concerns.
Respectfully Submitted by:
Charles M. Long
Project Manager, T-Bone Construction
719-570-1456



This document contains confidential and proprietary information of T-Bone Construction, Inc. which shall not be disclosed outside the "City of Fountain" without the prior written approval of T-Bone Construction, Inc. This communication, including attachments, contains information that is confidential. It constitutes non-public information intended to be conveyed only to the designated recipient(s). The unauthorized use, dissemination, distribution, or reproduction of this document, including attachments, is prohibited and may be unlawful.

## SPECIFICATIONS

**Work to be performed:**

We propose to furnish the following material, labor and equipment to accomplish the task of building barrier located at three offices within City Hall (City Clerk, Administrative Office & Court Office). SEE ATTACHED SKETCH FOR EACH OFFICE. Includes supervision and clean up.

**ALUMINUM STOREFRONT GLASS AND GLAZING PER ATTACHED SKETCH TO INCLUDE:**
Doors-Wide Stile 500 Standard Entrance (With Concealed Panic Device)
10" Bottom Rail Assembly
4-1/2" x 4" Butt hinges and prep charges
4-1/2" x 4" Intermediate butt hinges and prep charges
4-1/2" x 4" Intermediate butt hinges frame and prep charges.
Intr STD. Fail secure adims-Rite Intermittent Duty Electronic Door Strikes
1" Clear Tempered Insulated Glass in Doors
LCN 4040 Super smooth surface mounted closer and drop plate

Frames: 2" x 4-1/2" Dark Bronze Anodized Frames
City Clerk area has 2 pass thru
Administrative area has 1 pass thru
Court Office area has 2 pass thru

Glass: 1" Clear Tempered Insulated Glass (THIS IS NOT BULLET RESISTANT GLASS)
The Pass Thru windows will be wrapped with Aluminum U-Channel
Pass thru Sizes: Administrative & City Clerk Office are about 12" x 6", Court Office is about 16" x 6"
*This proposal is good until March 16, 2016

Schedule: 2 weeks for material order from date of acceptance plus 2 weeks install (start to finish time: 4 weeks)

ALTERNATE PRICING: If the City chooses Bullet Resistant Glass, the cost would be approximately double. The additional lead time for production (Add 2 more weeks on to the existing 4 week schedule)

Exclusions: Materials and any labor to run power to the electronic door strikes, City of Fountain and or Pikes Peak Regional Building department fees, permits or drawings (other than those shop drawings contained within this estimate),

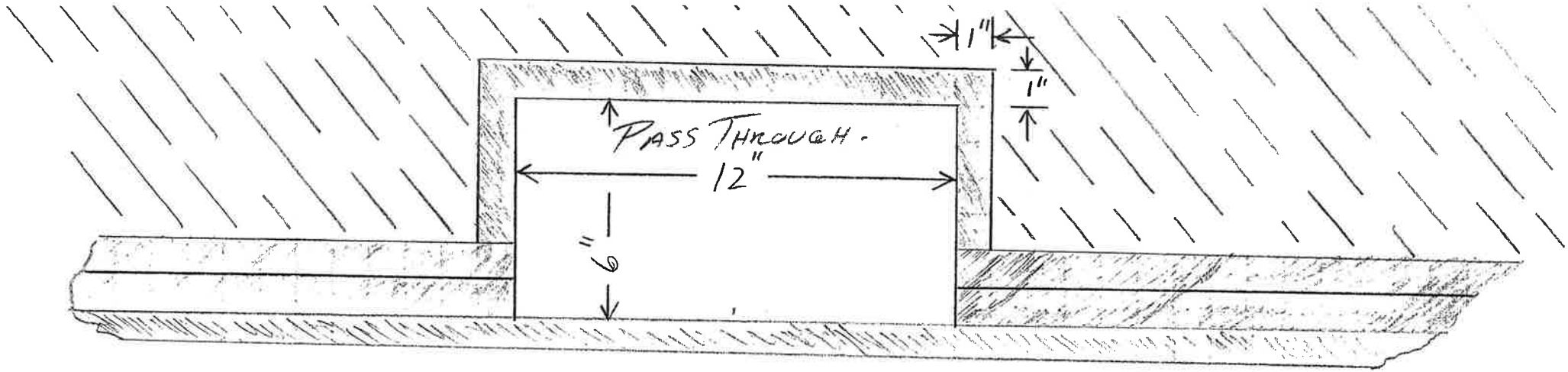


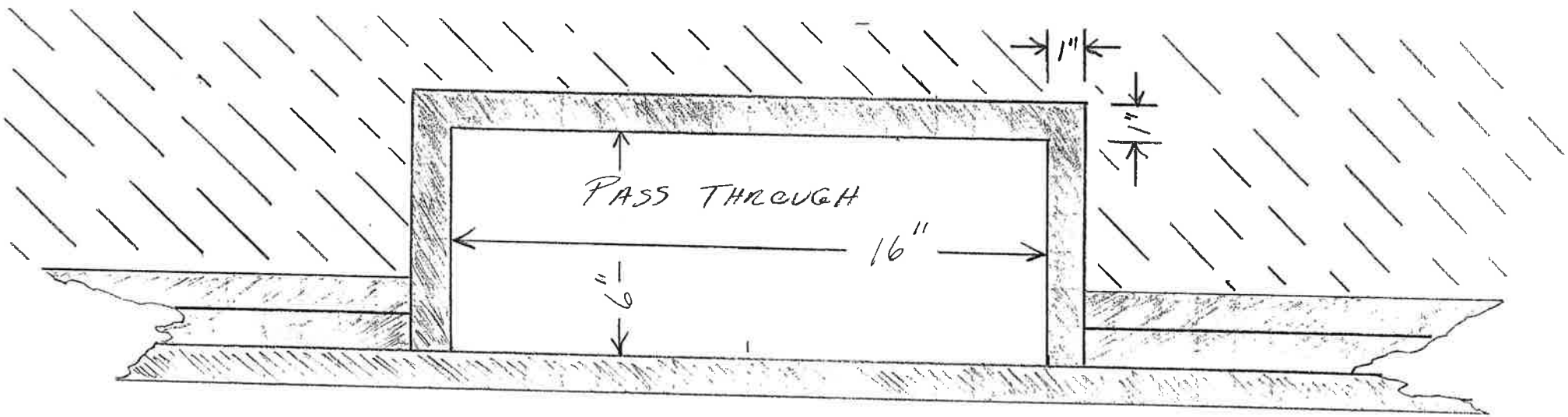


COURT OFFICE

JONEY'S OFFICE

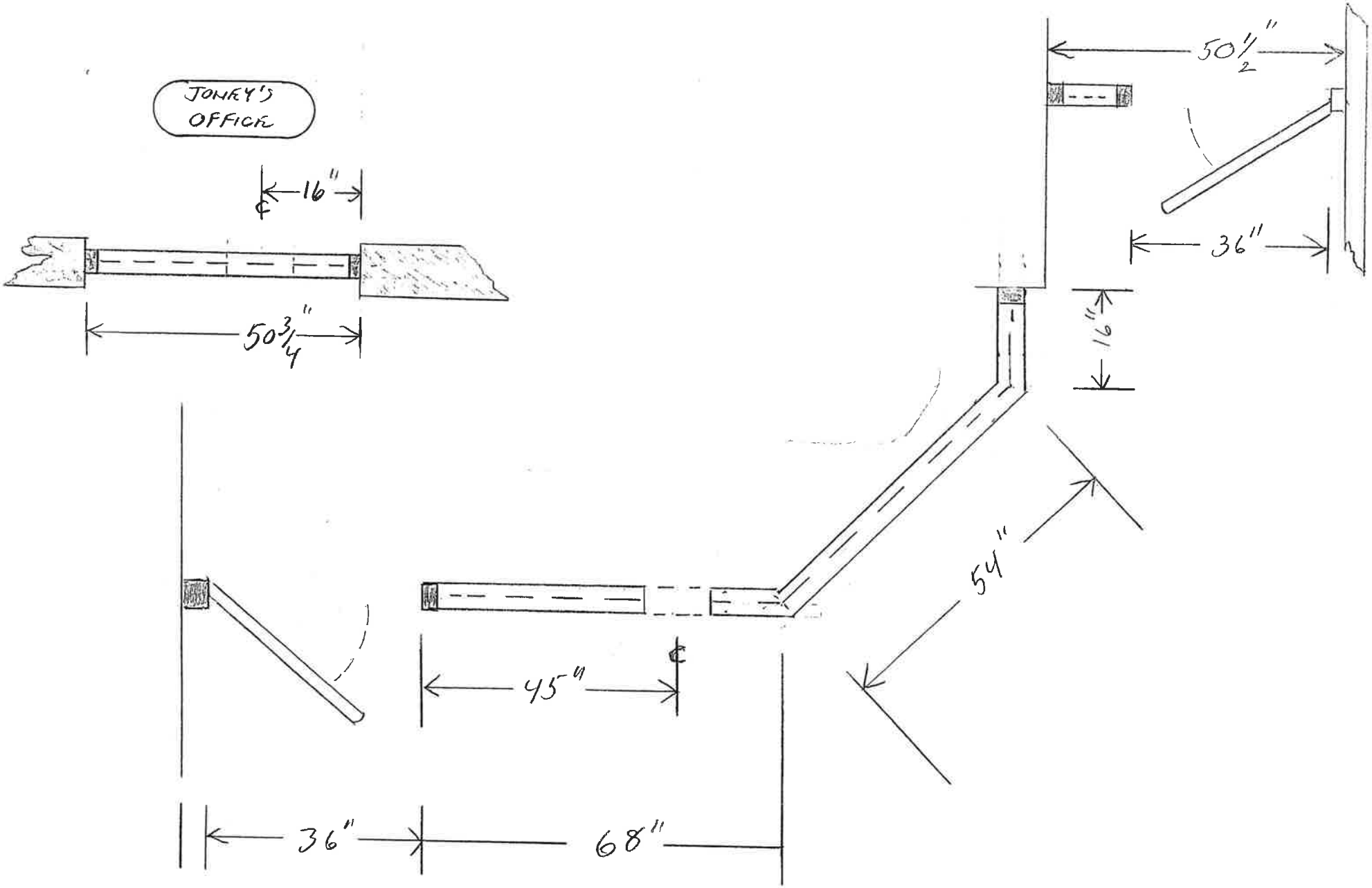

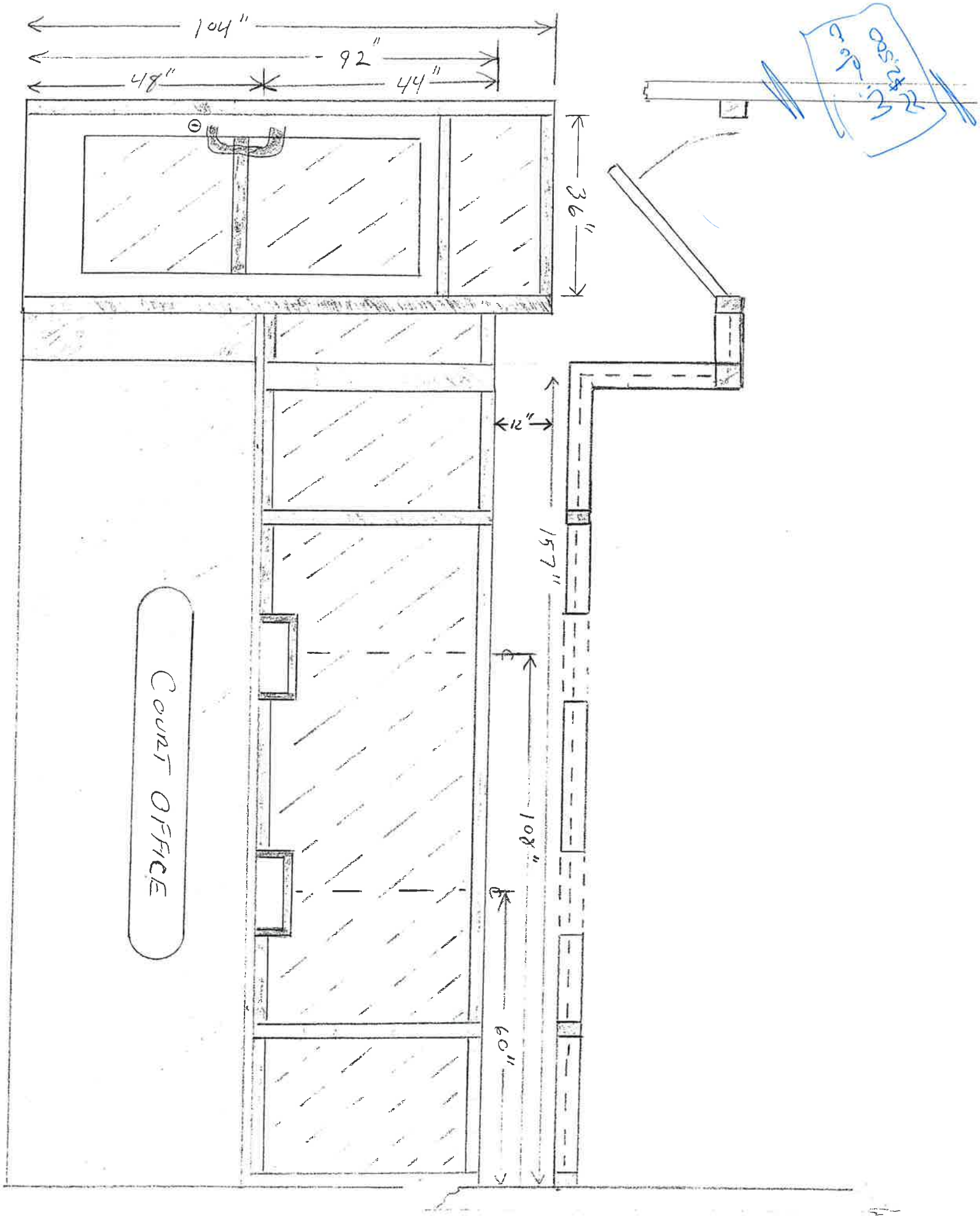
104"
92"
48"
44"
36"
12"
157"
108"
60"
COURT OFFICE

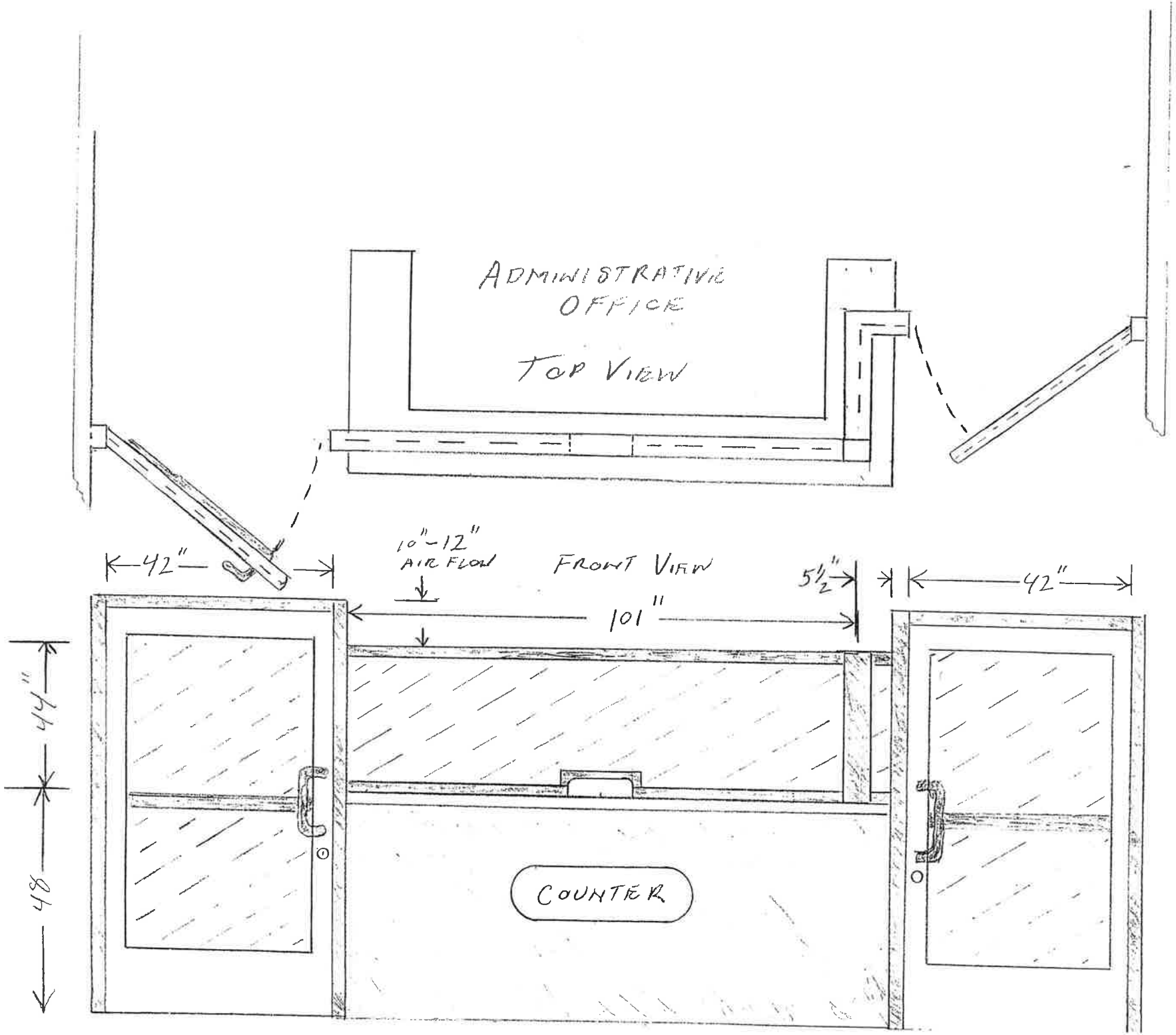
ADMINISTRATIVE OFFICE
TOP VIEW
FRONT VIEW
42"
10"-12" AIR FLOW
101"
5½"
42"
44"
48"
COUNTER

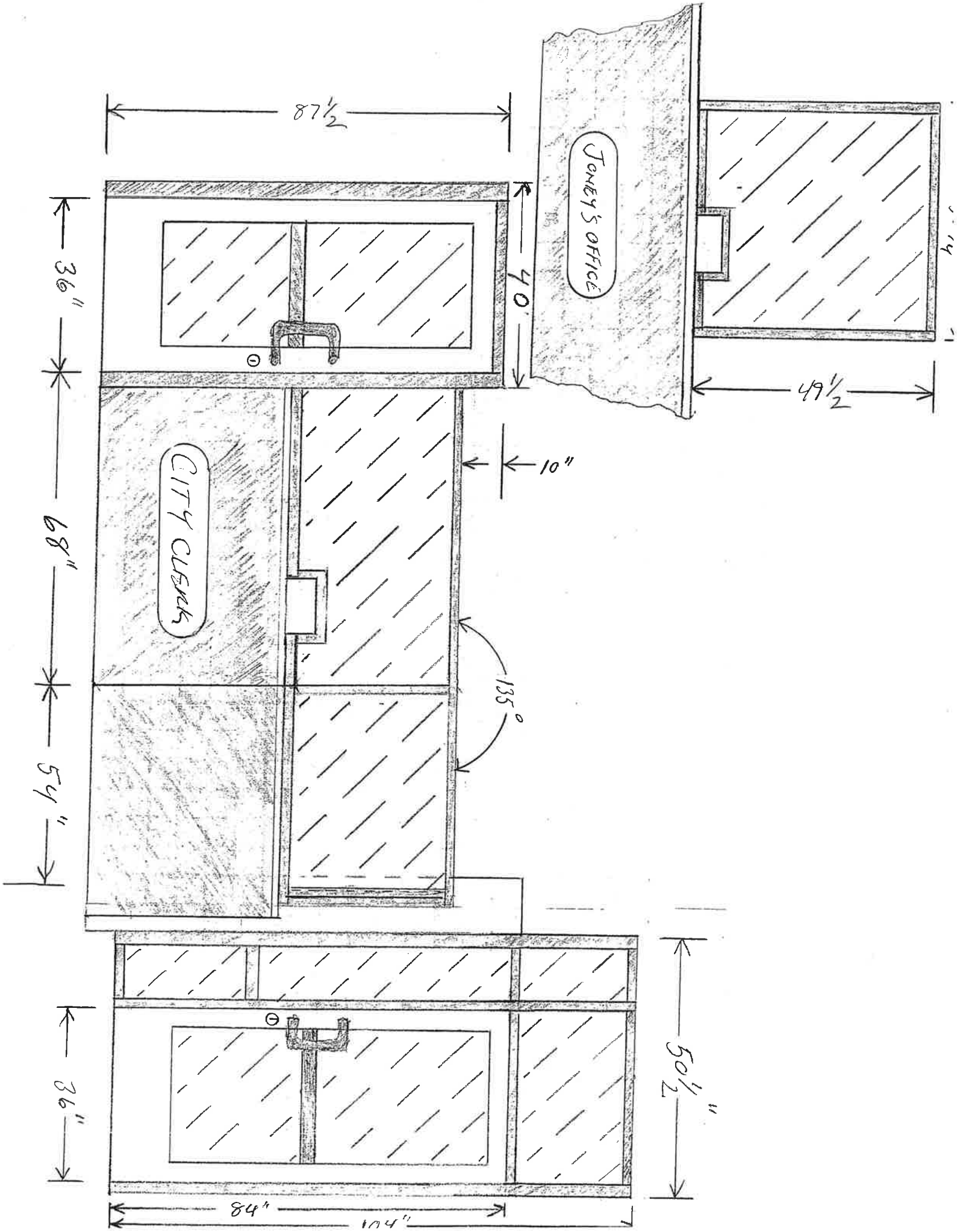
87½
JONEY'S OFFICE
36"
40
49½
10"
CITY CLERK
68"
135°
54"
36"
50½"
84"
104"

# Regular City Council Meeting

**Consent –7D**

Resolution 16-018

*May 24, 2016*

## Summary Information

Title:
RESOLUTION 16-018, A RESOLUTION ACKNOWLEDGING FORFEITURE OF ANY INTEREST THE CITY MAY HAVE IN AN INDENTURE RECORDED IN 1925 IN EL PASO COUNTY, COLORADO AT RECEPTION NO. 38835

| | |
|---|---|
| Initiator: Carl Christian, Superintendent | ☒ Council Action |
| Presenter: Carl Christian, Superintendent | ☐ Council Information |
| Legal Review: ☒ Yes ☐ No | ☐ Report to Council |

Classic Consulting Engineers & Surveyors has requested the City's interest in Indenture No. 388345 entered into in 1925 between The Myron Stratton Home and the Town of Fountain, Colorado.

A Resolution for this purposes is attached

## Background Information

On July 14, 1925, the Town of Fountain and the Myron Stratton Home entered into an Indenture for the purpose of allowing the construction of an electric transmission line. Under the terms of this agreement, all rights and privileges granted would immediately cease should the Town of Fountain cease to operate said electric transmission line.

This transmission line was never constructed, and by the terms of the indenture, it appears, but it is not clear, that the City has no interest in the property. Furthermore, although the indenture refers to a right-of-way, and the term "easement" is also used, it is not clear what the City's interest is.

Staff has determined that the indenture did not convey an easement and also did not convey a right-of-way to the City. Because of the language in the indenture, and because the City has not need to construct a transmission line over the property in the foreseeable future, it is appropriate for the City to forfeit any interest the City may have in the indenture. This action will permit the property to be held clear of any City interest.

## Recommendation

Staff recommends adoption of the Attached resolution.

## Proposed Motion

I move approval of the Resolution 16-018.

CM Review

City of Fountain
Pure Colorado

Fountain
All-America City
2002

# RESOLUTION 16- 018

## A RESOLUTION ACKNOWLEDGING FORFEITURE OF ANY INTEREST THE CITY MAY HAVE IN AN INDENTURE RECORDED IN 1925 IN EL PASO COUNTY, COLORADO AT RECEPTION NO. 38835

WHEREAS, in 1925 the City acquired a "right of way and license" real in property contingent on the City constructing and maintaining an overhead transmission line as specified in an indenture recorded on August 13, 1925 at Reception No. 388345 in the Office of the Clerk and Recorder of El Paso County, Colorado, a copy of which is attached as Appendix 1; and

WHEREAS, the City never constructed the transmission line and has no interest in constructing and maintaining a transmission line on that property in the foreseeable future; and

WHEREAS, the interest of the City in the "right of way and license" by the terms of the indenture may have ceased to exist at some time in the past because of the City's failure to construct and maintain a transmission line over the property; and

WHEREAS, the use of the term "right of way" in the indenture did not create a right-of-way as that term is used in the State Statutes; and

WHEREAS, because there is no right-of-way, Colorado law does not require a public hearing to vacate the City's interest in the indenture; and

WHEREAS, because it is not clear whether the City's interest in the "right of way and license" has ceased to exist, this potential interest prevents the landowner from having clear title to the property; and

WHEREAS, section 12.3 of the Charter provides that Council, and not the City Manager, may dispose of interests in real property;

**BE IT RESOLVED BY** THE CITY COUNCIL OF THE CITY OF FOUNTAIN COLORADO:

**Section 1.** The City Council acknowledges that it has no interest in the "right of way and license" specified in the indenture recorded at Reception No.

388345, in the Office of the Clerk and Recorder of the County of El Paso Colorado.

**Section 2.** This resolution shall be in effect upon approval by City Council.

_____
Gabriel P. Ortega, Mayor

ATTEST:

_____
Silvia Huffman, City Clerk

No. 388345
Right-of-Way.

The Myron Stratton Home

to

The Town of Fountain.

Filed for Record 2:00 P.M.

August 13, 1925.

C. H. Furrow, Recorder.

THIS INDENTURE, Made and entered into this 14th day of July, A.D.1925 by and between The Myron Stratton Home, a charitable corporation duly organized and existing under and by virtue of the laws of the State of Colorado, hereinafter called the "Home" and The Town of Fountain, Colorado, a municipal corporation duly organized and existing under the laws of the State of Colorado, hereinafter called the "Town".

WITNESSETH:

WHEREAS, said Town is contemplating the construction of an overhead line for the transmission of electric power, consisting of wires to carry primary circuit and the necessary poles to support the said wires at the proper distance above ground, and the necessary guys, stubs, anchors, etc. to make the said line stable and secure, from the Town of Fountain, Colorado, to the City of Colorado Springs, Colorado and

WHEREAS said proposed power line will pass over and across certain real estate in El Paso

County, owned by said Home and described as follows, to-wit:

The Northwest Quarter of the Southwest Quarter (NW¼ of the SW¼) of Section thirty-three (33), Township Fourteen 14 South, Range 66 West.

NOW, THEREFORE, in consideration of the premises and of the further consideration of the sum of one Dollar in hand paid by said Town to said Home, the receipt whereof is hereby confessed and acknowledged, the said Home by these presents grants and conveys a right of way and license to the said Town of Fountain, Colorado, for the construction and maintenance of that portion of said electric power line described as follows:

Beginning at a point approximately 260 feet north and 28.5 feet east of the west ¼ corner of Section 33, Township 14 South, Range 66 West and running thence south easterly at an angle of 61°17' from a line parallel to the west boundary of the Northwest ¼ Section 33, Township 14 South, Range 66 West, 1185 feet to an angle point, thence southeasterly at an angle of 27°30' more or less, right 667 feet to an angle point, thence southerly at an angle of [illegible] more or less, right 408 feet to an angle point, thence southeasterly at an angle of 10°16' more or less, right 607 feet to an angle point, which point is 28.5 feet northeasterly from the center line of the concrete pavement on the Colorado Springs-Pueblo Highway, opposite Station 141-60, as established by the surveys of The Colorado State Highway Department, division 5, for Federal Aid Project No.277a

which may pass over and across said Northwest Quarter of said Southwest Quarter of Section 33, Township 14, South, Range 66 West, El Paso County, Colorado, with the full right in said Town of ingress and egress for the purpose of maintaining said line.

The said Town of Fountain by the acceptance of this grant assumes and agrees to pay to the said Home any and all damages it may sustain to any of its real or personal property by reason of the maintenance by said Town of the aforesaid Pole Line, and also assumes and agrees to pay all damages that may be sustained by any third party by reason thereof and to save the said Myron Stratton Home harmless for any damages that it may sustain or that may be sustained by any third party.

If, however, said Town of Fountain shall cease to operate said transmission line, then all rights and privileges hereby granted shall immediately cease and determine and said Town of Fountain shall thereupon promptly at its sole expense, remove the whole of said transmission line from the premises of said Home.

In Witness Whereof, the said Myron Stratton Home has caused these presents to be executed by its President and attested by its Secretary and its corporate seal to be hereunto affixed the day and year first above written.

The Myron Stratton Home

Wm. Lloyd
President.

Attest:
H. L. Stubbs,
Secretary.

STATE OF COLORADO )
) ss.
COUNTY OF EL PASO )

I, Kenneth Brown a Notary Public in and for said County, in the State aforesaid, do hereby certify that Wm. Lloyd, President and H. L. Stubbs, Secretary of The Myron Stratton Home, who are personally known to me to be the persons whose names are subscribed to the foregoing instrument in writing, as President and Secretary of said Corporation, appeared before me this day in person, and acknowledged that at the time of the execution of the said instrument in writing they were respectively the President and Secretary of the said Corporation; that the seal affixed thereto is the common and corporate seal of the

said Corporation and that they signed, sealed and delivered the said instrument in writing as their free and voluntary act, and as the free and voluntary act of the said The Myron Stratton Home, for the uses and purposes therein set forth.

Given under my hand and official seal, this 30th day of July A. D. 1925.

My commission expires February 28, 1927.

Kenneth Brown.
Notary Public.

KENNETH BROWN
NOTARY
PUBLIC
CUYAHOGA COUNTY, OHIO

# Regular City Council Meeting

**Old Business – 8A**

*May 24, 2016*

## Summary Information

Title:

**SECOND READING OF ORDINANCE 1673ORDINANCE REPEALING THE (2012) EMERGENCY OPERATIONS PLAN AND ADOPTING BY REFERENCE THE 2016 CITY OF FOUNTAIN EMERGENCY OPERATIONS PLAN IN ACCORDANCE WITH CHAPTER 2.36.050 OF THE FOUNTAIN MUNCIPAL CODE**

| | |
|---|---|
| Initiator : Luchia Tingley, OEM Manager/Mark Stanwood Assist OEM Manager | ☒ Council Action |
| Presenter: Luchia Tingley, OEM Manager | ☐ Council Information |
| Legal Review: ☐ Yes ☐ No | ☐ Report to Council |

Summary Overview and List of Attachments:

Updated Emergency Operations Manual was emailed to City Council on January 12, 2016 and again on March 16, 2016 for review.

There have been no changes to this Ordinance since first reading.

## Background Information

By the City of Fountain ordinance it is required to update the Emergency Operations Manual every five years. Due to the many changes and Continuity of Operations the update has been completed early. Last update was 2012.

## Recommendation

Recommend approval of Ordinance 1673 on second reading.

## Proposed Motion

I move to approve Ordinance 1673 on second reading.

CM Review

# Regular City Council Meeting

## New Business – 9A

Items Removed from Consent

May 24, 2016

### Summary Information

Title:
Consideration of Items Removed from the Consent Agenda

| | |
|---|---|
| Initiator : City Clerk Huffman | ☒ Council Action |
| Presenter: Silvia Huffman, City Clerk | ☐ Council Information |
| Legal Review: ☐ Yes ☒ No | ☐ Report to Council |

Summary Overview and List of Attachments:

Any Items removed from the Consent agenda for further discussion shall be heard under this item

### Background Information

N/A

### Recommendation

N/A

### Proposed Motion

CM Review

# Regular City Council Meeting

**New Business –9B**

***Bond Ordinance No. 1674***

*May 24, 2016*

## *Summary Information*

Title:

First Reading of Ordinance No. 1674, An Ordinance of the City of Fountain, Colorado approving the issuance of its Water Revenue Refunding Bonds, Series 2016, for the Purpose of Refinancing the City's 2008 Loan with the Colorado Water Resources & Power Development Authority (CWRPDA), funding the reserve account, and paying the cost of issuance of the Bonds; Authorizing the Forms of such Bonds and other details with respect to such bonds and the payment thereof; providing for payment of the Bonds from a portion of the revenues of the City's Electric, Water and Wastewater Utility Enterprise and making certain covenants in connection therewith; and providing details in connection with the Bonds.

| | |
|---|---|
| Initiator : City Manager, Scott Trainor | ☒ Council Action |
| Presenter: City Manager, Scott Trainor | ☐ Council Information |
| Legal Review: ☒ Yes ☐ No | ☐ Report to Council |

Summary Overview and List of Attachments:

This Ordinance approves the issuance of new City of Fountain Water Fund Bonds to refinance the City's 2008 Loan with the CWRPDA, funding the reserve account, and paying the cost of issuance of the Bonds.
Attachments: Ordinance No. XXX.

## *Background Information*

The City acting through its Electric, Water and Wastewater Utility Enterprise received a loan of $8.795 million from the CWRPDA in 2008 to fund various Water Fund related projects including the Southern Delivery System. The current outstanding principal amount is $7.65 million and the City will issue new Bonds totaling up to $7.9 million to refund the bonds and pay for issuance costs.

It is advantageous at this time to refund the 2008 Loan. The City's Financial Advisor, Jonathan Heroux with Piper Jaffray, estimates that the annual savings will be in excess of $60,000 per year over the remaining 23 year life of the bonds (including 2016) or $1.38 million. Current market conditions if selling today would result in savings in excess of $2 million. The ordinance was prepared by the City's bond counsel, Kenneth Guckenberger with Kutac Rock LLP and he will be at the City Council meeting to answer any questions. The bonds will be marketed with Brian Kelso of RW Baird. All three of the entities will provide guidance throughout the entire process up to and including the Preliminary Official Statement, the rating with Standard & Poor's (S&P) and closing of the bonds in July and Final Official Statement.

Based upon the City's current bond rating of "A" from S&P, the City will be seeking bids for bond insurance and a surety policy to fund the reserve. Bond insurance and a surety policy have been used on prior City bond issues and can be utilized for the 2016 Bonds if it's determined to provide the lowest overall borrowing cost.

## *Recommendation*

Approve Ordinance No. 1674 on first reading.

## *Proposed Motion*

"I make a motion to approve Ordinance No. 1674 on first reading"

CM Review

**CERTIFIED RECORD**

**OF**

**PROCEEDINGS OF THE CITY COUNCIL**

**OF THE CITY OF FOUNTAIN, COLORADO,**

**ACTING BY AND THROUGH THE CITY OF FOUNTAIN**

**ELECTRIC, WATER, AND WASTEWATER UTILITY ENTERPRISE**

**RELATING TO AN ORDINANCE**

**AUTHORIZING THE ISSUANCE OF UP TO:**

**$7,650,000**
**WATER REVENUE REFUNDING BONDS**
**SERIES 2016**

***This cover page is not a part of the following Ordinance and is included solely for the convenience of the reader.***

Table of Contents


| | | Page |
|---|---|---|
| Section 1. | Definitions | 5 |
| Section 2. | Certification of City's Authority to Issue Bonds as Additional Lien Obligations under the Authority Loan Agreements | 11 |
| Section 3. | Authorization and Purpose of Bonds | 12 |
| Section 4. | Pledge for Payment of the Bonds | 12 |
| Section 5. | Bond Details | 13 |
| Section 6. | Delegation and Parameters | 14 |
| Section 7. | Form of the Bonds | 15 |
| Section 8. | Execution, Authentication and Delivery of the Bonds | 15 |
| Section 9. | Registration, Transfer and Exchange of the Bonds | 16 |
| Section 10. | Replacement of Lost, Destroyed or Stolen Bonds | 17 |
| Section 11. | Redemption of Bonds Prior to Maturity | 17 |
| Section 12. | Reaffirmation of Funds and Accounts; Creation of Accounts | 18 |
| Section 13. | Application of Bond Proceeds | 18 |
| Section 14. | Reserved | 18 |
| Section 15. | Deposit of Revenues | 18 |
| Section 16. | Bond Account | 19 |
| Section 17. | Reserve Account | 19 |
| Section 18. | Cost of Issuance Account | 20 |
| Section 19. | Investments | 21 |
| Section 20. | Conditions to Issuance of Additional Senior, Parity, and Subordinate Lien Obligations | 21 |
| Section 21. | Additional General Covenants and Representations | 22 |
| Section 22. | Covenants Regarding Exclusion of Interest on Bonds from Gross Income for Federal Income Tax Purposes | 25 |
| Section 23. | Authorization of Bond Insurance | 27 |
| Section 24. | Obligation to Provide Continuing Disclosure | 27 |
| Section 25. | Defeasance | 27 |
| Section 26. | Events of Default | 28 |
| Section 27. | Notice of Default | 28 |
| Section 28. | Remedies for Events of Default | 28 |
| Section 29. | Execution of Documents | 29 |
| Section 30. | Amendment of Ordinance | 29 |
| Section 31. | Application of Act | 31 |
| Section 32. | Provisions Relating to Bond Insurer | 31 |
| Section 33. | Appointment and Duties of Paying Agent | 31 |
| Section 34. | Approval of Negotiated Sale of Bonds | 32 |
| Section 35. | Approval of Official Statement and Miscellaneous Documents | 32 |
| Section 36. | Ratification of Prior Actions | 32 |
| Section 37. | Events Occurring on Days That Are Not Business Days | 32 |
| Section 38. | Captions | 32 |
| Section 39. | Ordinance Irrepealable | 32 |
| Section 40. | Severability | 32 |

Table of Contents
(continued)

Page

Section 41. Repealer ..... 33
Section 42. Effective Date; Recording and Authentication ..... 33

APPENDIX A FORM OF BOND

STATE OF COLORADO )
) ss
COUNTY OF EL PASO )

I, Clerk to the City Council of City of Fountain, Colorado, acting by and through the City of Fountain Electric, Water and Wastewater Utility Enterprise (the "City"), do hereby certify that:

1. Attached is a true and correct copy of an ordinance (the "Ordinance") adopted by the City Council (the "City Council") at a regular meeting held on _____, 2016.

2. Notice of such meeting was posted in a public place within the boundaries of the City designated by the City Council for the posting of notices of meetings of the City Council no less than 24 hours prior to the holding of the meeting.

3. The Ordinance was duly moved, seconded and adopted at such meeting by the affirmative vote of a majority of the members of the City Council as follows:

| Council Member | Yes | No | Absent | Abstaining |
|---|---|---|---|---|
| Gabriel Ortega, Mayor | ____ | ____ | ____ | ____ |
| Phil Thomas, Mayor Pro Tem | ____ | ____ | ____ | ____ |
| Sharon Thompson | ____ | ____ | ____ | ____ |
| Jim Coke | ____ | ____ | ____ | ____ |
| Sam Gieck | ____ | ____ | ____ | ____ |
| Greg Lauer | ____ | ____ | ____ | ____ |
| Richard Applegate | ____ | ____ | ____ | ____ |

4. The Ordinance was duly approved by the City Council, signed by the Mayor, sealed with the City's seal, attested by the City Clerk and recorded in the minutes of the City Council.

5. The meeting at which the Ordinance was adopted was noticed, and all proceedings relating to the adoption of the Ordinance were conducted in accordance with all applicable bylaws, rules, regulations and Ordinances of the City, in accordance with the normal procedures of the City relating to such matters, and in accordance with applicable constitutional provisions and statutes of the State of Colorado and all other applicable laws.

WITNESS my hand and the seal of the City this ___ day of _____ 2016.

_____
Clerk to the City Council

[SEAL]

**ORDINANCE NO. 1674**

AN ORDINANCE OF THE CITY OF FOUNTAIN, COLORADO, APPROVING THE ISSUANCE OF ITS WATER REVENUE REFUNDING BONDS, SERIES 2016, FOR THE PURPOSE OF REFINANCING THE CITY'S REFUNDED LOAN WITH THE COLORADO WATER RESOURCES AND POWER DEVELOPMENT AUTHORITY, FUNDING THE RESERVE ACCOUNT OR PURCHASING A RESERVE ACCOUNT CONTRACT, AND PAYING THE COSTS OF ISSUANCE OF THE BONDS; AUTHORIZING THE FORMS OF SUCH BONDS AND OTHER DETAILS WITH RESPECT TO SUCH BONDS AND THE PAYMENT THEREOF; PROVIDING FOR PAYMENT OF THE BONDS FROM A PORTION OF THE REVENUES OF THE CITY'S ELECTRIC, WATER AND WASTEWATER UTILITY ENTERPRISE AND MAKING CERTAIN COVENANTS IN CONNECTION THEREWITH; AND PROVIDING DETAILS AND DOCUMENTS IN CONNECTION WITH THE BONDS.

WHEREAS, the City of Fountain, Colorado is a municipal corporation duly organized and operating as a home-rule city under Article XX of the State Constitution and the Charter of the City (unless otherwise indicated, capitalized terms used in this preamble shall have the meanings set forth in the Section hereof entitled "Definitions"); and

WHEREAS, the City is the owner and operator of an electric and water system and is authorized to own and operate a wastewater system, which electric and water system has historically been operated on a self-supporting basis by the City, is considered to be a government-owned business and is generally known as the "City of Fountain Electric, Water and Wastewater Utility Enterprise"; and

WHEREAS, the City is acting hereunder by and through its "City of Fountain Electric, Water and Wastewater Utility Enterprise" (the "Electric, Water and Wastewater Utility Enterprise") under the Charter; and

WHEREAS, in calendar year 2015 the Electric, Water and Wastewater Utility Enterprise was, and in calendar year 2016 the Electric, Water and Wastewater Utility Enterprise continues to be operated as government-owned businesses authorized to issue its own revenue bonds and receiving under 10% of annual revenue in grants from all State and local governments combined, and the City Council hereby determines and reaffirms that the Electric, Water and Wastewater Utility Enterprise is an enterprise within the meaning of Article X, Section 20 of the Colorado Constitution; and

WHEREAS, the City previously issued that certain 2008A City Bond, dated January 21, 2009, originally issued to the Colorado Water Resources and Power Development Authority (the "Authority") in the aggregate principal amount of $8,795,000, and is currently outstanding in the aggregate principal amount of $7,650,000 (the "Refunded Loan") in connection with a Loan Agreement, dated as of December 1, 2008, by and between the City and the Authority (the "Refunded Loan Agreement") for the purpose of paying for certain costs associated with the City's utility system; and

WHEREAS, the City believes it can refinance the Refunded Loan at a substantial cost savings to the Electric, Water and Wastewater Utility Enterprise; and

WHEREAS, pursuant to Section 10.5 of the Charter, the City may issue revenue bonds payable solely from revenues derived from the operation of a project or improvements; and

WHEREAS, the City is authorized pursuant to Part 1 of Article 56 of Title 11, C.R.S. (the "Refunding Act"), to issue refunding bonds for the purpose, among others, of reducing the total interest payable over the life of such obligations or effecting other economies; and

WHEREAS, to finance the estimated costs of refunding the Refunded Loan plus reserves and costs of issuance related thereto, the City Council has determined to issue its Water Revenue Refunding Bonds, Series 2016, dated their date of delivery, in the total principal amount of not to exceed $7,900,000 (the "Bonds"), subject to certain terms of the Bonds to be set forth in the Sale Certificate, as more particularly set forth herein; and

WHEREAS, the Bonds shall constitute a special revenue obligation of the City that is generally payable from the income for the services furnished by or the use of the System (defined in the Section hereof entitled "Definitions"), less reasonable and necessary current expenses of the City of operating, maintaining and repairing the System, on parity with the City's previously issued Authority Bonds, Series 2015 Bonds and Water Rights Notes, as described below, and after consideration, the City Council has determined that the issuance of the Bonds is to the best advantage of the City; and

WHEREAS, in connection with a Loan Agreement, dated as of May 1, 2011, by and between the City and the Authority (the "2011 Authority Loan Agreement"), the City has previously issued that certain City Bond, dated May 4, 2011, originally issued to the Authority in the aggregate principal amount of $9,350,000, and currently outstanding in the aggregate principal amount of $8,810,000 (the "2011 Authority Bond"); and

WHEREAS, in connection with a Loan Agreement, dated as of March 1, 2013, by and between the City and the Authority (the "2013 Authority Loan Agreement"), the City has previously issued that certain City Bond, dated March 14, 2013, originally issued to the Authority in the aggregate principal amount of $11,615,000, and currently outstanding in the aggregate principal amount of $11,160,000 (the "2013 Authority Bond"); and

WHEREAS, in connection with a Loan Agreement, dated as of October 1, 2014, by and between the City and the Authority (the "2014 Authority Loan Agreement" and together with the 2011 Authority Loan Agreement and the 2013 Authority Loan Agreement, the "Authority Loan Agreements"), the City has previously issued that certain City Bond, dated November 25, 2014, originally issued to the Authority in the aggregate principal amount of $16,900,000, and currently outstanding in the aggregate principal amount of $16,835,000 (the "2014 Authority Bond" and together with the 2011 Authority Bond and the 2013 Authority Bond, the "Authority Bonds"); and

WHEREAS, the City previously issued its Water Revenue Bonds, Series 2015 (the "Series 2015 Bonds"), originally issued in the aggregate principal of $3,965,000 and currently outstanding in the aggregate principal amount of $3,965,000; and

WHEREAS, the City has previously issued a Promissory Note, dated April 21, 2003, to Glen C. Ermel and Michele T. Ermel in the original principal amount of $727,000 and currently outstanding in the amount of $72,700 (the "2003 Water Rights Note") in connection with a purchase of water rights; and

WHEREAS, the City has previously issued a Promissory Note, dated August 1, 2007, to Glen C. Ermel and Michele T. Ermel in the original principal amount of $390,500 and currently outstanding in the amount of $39,050 (the "2007 Water Rights Note" and together with the 2003 Water Rights Note, the "Water Rights Notes") in connection with a purchase of water rights; and

WHEREAS, the Bonds will be issued on parity with the Authority Bonds, the Series 2015 Bonds and the Water Rights Notes as an Additional Parity Obligation (defined in the Section hereof entitled "Definitions"); and

WHEREAS, the City is authorized under the Authority Loan Agreements and the Series 2015 Bond Ordinance to issue Additional Parity Obligations with a lien on the Net Revenues (defined in the Section hereof entitled "Definitions") and payable from the Net Revenues, which are on a parity with the lien of the Authority Bonds, Series 2015 Bonds and Water Rights Notes, to refund its outstanding Parity Lien Obligations, including the Refunded Loan, without compliance with certain revenue tests and other requirements, provided that the debt service payments on such refunding obligations do not exceed the debt service payments on the refunded obligations during any calendar year; and

WHEREAS, the debt service payments on the Bonds are anticipated to not exceed the debt service payments on the Refunded Loan during any calendar year; and

WHEREAS, the Bonds will not be payable from any tax and, pursuant to applicable laws of the State, voter approval is not required for the issuance of revenue bonds by the City, acting by and through its Electric, Water and Wastewater Utility Enterprise; and

WHEREAS, none of the members of the City Council have any potential conflicting interests in connection with the authorization, issuance, or sale of the Bonds, or the use of the proceeds thereof; and

WHEREAS, the City Council has been presented with a proposal from Piper Jaffray & Co., to facilitate the offer and sale of the Bonds by means of an underwriting by Robert W. Baird & Co., Incorporated upon specified terms and conditions in a Bond Purchase Agreement (the "Bond Purchase Agreement"), the final terms and conditions of which are to be set forth in the Sale Certificate, and, after consideration, the City Council has determined that the negotiated sale of the Bonds, subject to the parameters set forth herein is to the best advantage of the City; and

WHEREAS, there has been presented to the City and available to the City Council, among other things, (a) the Preliminary Official Statement, (b) the Paying Agent Agreement, (c) the Bond Purchase Agreement and (d) the Continuing Disclosure Undertaking; and

WHEREAS, the City Council desires to authorize the issuance and sale of the Bonds and the execution of the necessary and appropriate documents; and

WHEREAS, pursuant to the Charter, the Act, the Refunding Act, and by this Ordinance, the City authorizes the issuance of the Bonds, and delegates to the Mayor, for a period not to exceed one year from the effective date of this Ordinance, the authority to approve, among other things, the principal amount of the Bonds maturing in any particular year, the rate of interest on the Bonds, and the identity of the Bond Insurer, if any.

BE IT ORDAINED BY THE CITY COUNCIL OF FOUNTAIN, COLORADO:

**Section 1. Definitions.** The following terms (in addition to those defined above) shall have the following meanings as used in this Ordinance:

"*Act*" means the Title 11, Article 57, Part 2, C.R.S., and all other laws of the State establishing the power of the City to complete the financing contemplated by this Ordinance.

"*Additional Parity Obligations*" means any additional obligations with a lien on the Net Revenues and payable from the Net Revenues that are on parity with the lien of the Authority Bonds, the Series 2015 Bonds, and Water Rights Notes, and after issuance of the Bonds, the Bonds.

"*Authority*" means the Colorado Water Resources and Power Development Authority, a body corporate and political subdivision of the State with corporate succession duly created and validly existing under and by virtue of Section 37-95-101, et seq., C.R.S.

"*Authority Bonds*" means the 2011 Authority Bond, the 2013 Authority Bond and the 2014 Authority Bond.

"*Authority Loan Agreements*" means the 2011 Authority Loan Agreement, the 2013 Authority Loan Agreement, and the 2014 Authority Loan Agreement, by and between the City and the Authority, pursuant to which the Authority agreed to loan the proceeds of its water resources revenue bonds to the City for various purposes.

"*Beneficial Owner*" means any person for which a Participant acquires an interest in the Bonds.

"*Bond Account*" means the "Water Revenue Refunding Bonds, Series 2016, Bond Account" created in the Section hereof entitled "Reaffirmation of Funds and Accounts; Creation of Accounts" and as more particularly described in the Section hereof entitled "Bond Account."

"*Bond Counsel*" means (a) as of the date of issuance of the Bonds, Kutak Rock LLP, of Denver, Colorado, and (b) as of any other date, Kutak Rock LLP or such other attorneys selected by the City with nationally recognized expertise in the issuance of municipal bonds.

"*Bond Insurance Policy*" means the municipal bond insurance policy, if any, issued by the Bond Insurer insuring the payment when due of the principal of, premium, if any, and interest on all or any portion of the Bonds, as provided therein.

"*Bond Insurer*" means the entity, if any, identified in the Sale Certificate as the issuer of the Bond Insurance Policy, or any successor thereto.

"*Bond Purchase Agreement*" means the Bond Purchase Agreement, by and between the City and the Original Purchaser.

"*Bonds*" means the "City of Fountain, Water Revenue Refunding Bonds, Series 2016" authorized hereby.

"*Business Day*" means any day other than (a) a Saturday or Sunday or (b) a day on which banking institutions in the State are authorized or obligated by law or executive order to be closed for business.

"*Cede*" means Cede & Co., the nominee of DTC as record owner of the Bonds, or any successor nominee of DTC with respect to the Bonds.

"*Charter*" means the home rule Charter of the City.

"*City*" means the City of Fountain, Colorado, acting by and through its Electric, Water and Wastewater Utility Enterprise.

"*City Council*" means the City Council of the City.

"*Code*" means the Internal Revenue Code of 1986, as amended. Each reference to a section of the Code herein shall be deemed to include the United States Treasury Regulations proposed or in effect thereunder and applicable to the Bonds or the use of proceeds thereof, unless the context clearly requires otherwise.

"*Commitment*" means, collectively, those certain offers, if any, to issue the Bond Insurance Policy, designated as the Commitment, issued by the Bond Insurer.

"*Continuing Disclosure Undertaking*" means the undertaking to facilitate compliance with Rule 15c2-12 under the Securities Exchange Act of 1934 in substantially the form appended to the Preliminary Official Statement.

"*Cost of Issuance Account*" means the "Water Revenue Refunding Bonds, Series 2016, Cost of Issuance Account" created in the Section hereof entitled "Reaffirmation of Funds and Accounts; Creation of Accounts" and as more particularly described in the Section hereof entitled "Cost of Issuance Account."

"*C.R.S.*" means the Colorado Revised Statutes, as amended and supplemented as of the date hereof.

"*Dated Date*" means the date of delivery of the Bonds.

"*DTC*" means the Depository Trust Company, New York, New York, and its successors and assigns, which shall act as the initial securities depository of the Bonds.

"*DTC Blanket Letter of Representations*" means the agreement between the City and DTC whereby the City agrees to comply with DTC's operational requirements.

"*Electric, Water and Wastewater Utility Enterprise*" means the utility activity business owned by the City generally known as the "City of Fountain Electric, Water and Wastewater Utility Enterprise," which is a government-owned business that receives under 10% of its annual revenues in grants from all State and local governments combined.

"*Event of Default*" means any of the events specified in the Section hereof entitled "Events of Default."

"*Federal Securities*" means bills, certificates of indebtedness, notes, bonds or similar securities which are direct non-callable obligations of the United States of America or which are fully and unconditionally guaranteed as to the timely payment of principal and interest by the United States of America.

"*Financial Advisor*" means Piper Jaffray & Co., Denver, Colorado.

"*Insured Bonds*" means those Bonds, if any, insured by a Bond Insurance Policy, as set forth in the Sale Certificate pursuant to the Section hereof entitled "Delegation and Parameters."

"*Interest Payment Date*" means the annual or semiannual dates set forth in the Sale Certificate for payment of interest on the Bonds.

"*Letter of Instructions*" means the Tax Letter of Instructions, dated the date on which the Bonds are originally issued and delivered to the City by Bond Counsel, as such instructions may be superseded or amended in accordance with their terms.

"*Moody's*" means Moody's Investor Service, New York, New York.

"*Net Revenues*" means the Revenues after deducting Operation and Maintenance Expenses; provided that such Net Revenues available for debt service will be limited to 50% of tap fee revenue.

"*Official Statement*" means the final version of the Preliminary Official Statement.

"*Operation and Maintenance Expenses*" means all reasonable and necessary current expenses of the City, paid or accrued, for operating, maintaining, and repairing the System, including without limitation legal and overhead expenses directly related to the administration of

the System, insurance premiums, audits, charges of depository banks and paying agents, professional services, salaries and administrative expenses, labor, and the cost of materials and supplies for current operation; provided however, that there shall be excluded from Operation and Maintenance Expenses any allowance for depreciation, payments in lieu of taxes or franchise fees, legal liabilities not based on contract, expenses incurred in connection with capital improvements, payments due in connection with any bonds or other obligations issued to provide capital improvements, and charges for the accumulation of reserves.

"*Ordinance*" means this ordinance authorizing the issuance of the Bonds, including any amendments properly made hereto.

"*Original Purchaser*" means Robert W. Baird & Co., Incorporated.

"*Outstanding*" means as of any date, all Bonds or Parity Lien Obligations, as the context requires, except the following:

(a) any Bond or Parity Lien Obligation cancelled by the City or the applicable paying agent, or otherwise on the City's behalf, at or before such date;

(b) any Bond or Parity Lien Obligation for the payment or the redemption of which moneys or Federal Securities sufficient to meet all of the payment requirements of the principal of, interest on, and any premium due in connection with the redemption of such Bond or Parity Lien Obligation to the date of maturity or any redemption date thereof, shall have theretofore been deposited in trust for such purpose; and

(c) any lost, apparently destroyed, or wrongfully taken Bond or Parity Lien Obligation in lieu of or in substitution for which another bond or other security shall have been executed and delivered.

"*Owner*" or "*Owners*" means the Person or Persons in whose name or names a Bond is registered on the registration books maintained by the Paying Agent pursuant hereto.

"*Parity Lien Obligations*" means the Authority Bonds, the Series 2015 Bonds, the Water Rights Notes and any other bonds or other obligations permitted to be issued pursuant to the Section hereof entitled "Additional Senior, Parity, and Subordinate Lien Obligations," with a lien on the Net Revenues and payable from the Net Revenues, which are on a parity with the lien of the Bonds.

"*Participant*" means any broker-dealer, bank, or other financial institution from time to time for which DTC or another substitute securities depository holds the Bonds.

"*Paying Agent*" means UMB Bank, n.a., which shall act as paying agent, bond registrar, and authenticating agent for the Bonds.

"*Permitted Investments*" means any investment lawfully permitted by applicable State law, as such definition may be further restricted in accordance with the requirements of a Bond Insurer, if any, as set forth in the Sale Certificate.

"*Person*" means a corporation, firm, other body corporate, partnership, association or individual and also includes an executor, administrator, trustee, receiver or other representative appointed according to law.

"*Preliminary Official Statement*" means the Preliminary Official Statement concerning the Bonds and used in the offer and sale of the Bonds.

"*Principal Payment Date*" means the annual or semiannual dates set forth in the Sale Certificate for payment of the principal of the Bonds.

"*Pro Rata Portion*" means the dollar amount derived by dividing the amount of principal or interest to come due on the next principal or interest payment date by the number of monthly credits required to be made prior to such payment date.

"*Rate Covenant*" means the requirements set forth in the paragraph entitled "Rate Covenant" in the Section entitled "Additional General Covenants and Representations."

"*Record Date*" means with respect to each Interest Payment Date, (a) if the Interest Payment Date is the first day of the month, the fifteenth day of the month immediately preceding the month (whether or not such day is a Business Day) in which such Interest Payment Date occurs; or (b) if the Interest Payment Date is the fifteenth day of the month, the first day of the month (whether or not such day is a Business Day) in which such Interest Payment Date occurs.

"*Refunded Loan*" means that certain 2008A City Bond, dated January 21, 2009, originally issued to the Authority pursuant to the Refunded Loan Agreement in the aggregate principal amount of $8,795,000, and currently outstanding in the aggregate principal amount of $7,650,000.

"*Refunded Loan Agreement*" means the Loan Agreement, dated as of December 1, 2008, by and between the City and the Authority, pursuant to which the Refunded Loan was issued.

"*Refunding Act*" means Part 1 of Article 56 of Title 11, C.R.S.

"*Reserve Account*" means the "Water Revenue Refunding Bonds, Series 2016, Reserve Account" created in the Section hereof entitled "Reaffirmation of Funds and Accounts; Creation of Accounts" and as more particularly described in the Section hereof entitled "Reserve Account."

"*Reserve Account Contract*" means a surety bond, insurance policy, letter of credit, investment agreement, investment contract or similar instrument.

"*Reserve Account Requirement*" means, as of any date on which it is calculated, the least of (a) 10% of the principal amount of the outstanding Bonds and Parity Lien Obligations, (b) the maximum annual debt service in any calendar year on the outstanding Bonds and Parity Lien Obligations or (c) 125% of the average annual debt service on the outstanding Bonds and Parity Lien Obligations; provided, however, that the Reserve Account Requirement may be reduced if, in the opinion of Bond Counsel, the funding or maintenance of it at the level otherwise

determined pursuant to this definition will adversely affect the exclusion from gross income tax for federal income tax purposes of interest on any of the Bonds or Parity Lien Obligations.

"*Revenues*" means all income and revenues directly or indirectly derived by the City from the operation and use of the System, or any part thereof, including without limitation, any rates, fees, plant investment fees, standby charges, availability fees, tolls, and charges for the services furnished by, or the use of, the System, and all income attributable to any past or future dispositions of property or rights or related contracts, settlements, or judgments held or obtained in connection with the System or its operations, and including investment income accruing from moneys held to the credit of the Utility Fund.

"*Sale Certificate*" means the certificate executed by the Sale Delegate in connection with the issuance of the Bonds, under the authority delegated pursuant to this Ordinance, including but not limited to the Sections hereof titled "Bond Details," "Delegations and Parameters" and "Approval of Official Statement and Miscellaneous Documents" which set forth, among other things, the aggregate principal amount of the Bonds, the prices at which the Bonds will be sold, interest rates and annual maturing principal for the Bonds, the dates on which the Bonds may be redeemed and the redemption prices therefore, and the identity of the Bond Insurer, if any, provisions required by the Bond Insurer, including terms of the Commitment.

"*Sale Delegate*" means the Mayor of the City or the Mayor Pro Tem in the absence of the Mayor.

"*Series 2015 Bond Ordinance*" means Ordinance No. 1661, adopted by the City Council on October 27, 2015, pursuant to which the Series 2015 Bonds were issued.

"*Series 2015 Bonds*" means the City's Water Revenue Bonds, Series 2015, originally issued in the aggregate principal of $3,965,000 and currently outstanding in the aggregate principal amount of $3,965,000 pursuant to the Series 2015 Bond Ordinance.

"*State*" means the State of Colorado.

"*Subordinate Lien Obligations*" means any bonds or other obligations permitted to be issued pursuant to the Section hereof entitled "Additional Senior, Parity, and Subordinate Lien Obligations," with a lien on the Net Revenues and payable from the Net Revenues, which are subordinate to the lien of the Bonds and the Parity Lien Obligations.

"*Swap Agreement*" means any interest rate exchange agreement, which is subject to the terms and conditions contained in the paragraph entitled, "Swap Agreements" in the Section hereof entitled "Additional General Covenants and Representations."

"*System*" means the property and facilities comprising the electric and water (but not wastewater) system of the City at the time of delivery hereof, including real and personal property and any easements, and also any and all additions and betterments thereto and improvements and extensions hereafter constructed or acquired by the City and used in connection with the electric and water (but not wastewater) facilities of the City.

"*S&P*" means Standard & Poor's Rating Services, a business of Standard & Poor's Financial Services LLC, a part of McGraw Hill Financial, New York, New York.

"*Utility Fund*" means the City's Utility Fund, which is used to account for all aspects of the operation of the City electric and water (but not wastewater) system including source of supply, operations and maintenance, customer service, administrative expenses, debt service, and capital outlay, and into which the Revenues are deposited.

"*Water Rights Notes*" means the 2003 Water Rights Note and the 2007 Water Rights Note.

"*2003 Water Rights Note*" means a Promissory Note issued by the City, dated April 21, 2003, to Glen C. Ermel and Michele T. Ermel in the original principal amount of $727,000 and currently outstanding in the amount of $72,700 in connection with a purchase of water rights.

"*2007 Water Rights Note*" means a Promissory Note issued by the City, dated August 1, 2007, to Glen C. Ermel and Michele T. Ermel in the original principal amount of $390,500 and currently outstanding in the amount of $39,050 in connection with a purchase of water rights.

"*2011 Authority Bond*" means that certain City Bond, dated May 4, 2011, originally issued to the Authority in the aggregate principal amount of $9,350,000, and currently outstanding in the aggregate principal amount of $8,810,000.

"*2011 Authority Loan Agreement*" means the Loan Agreement, dated as of May 1, 2011, by and between the City and the Authority, pursuant to which the 2011 Authority Bond was issued.

"*2013 Authority Bond*" means that certain City Bond, dated March 14, 2013, originally issued to the Authority in the aggregate principal amount of $11,615,000, and currently outstanding in the aggregate principal amount of $11,160,000.

"*2013 Authority Loan Agreement*" means the Loan Agreement, dated as of March 1, 2013, by and between the City and the Authority, pursuant to which the 2013 Authority Bond was issued.

"*2014 Authority Bond*" means that certain City Bond, dated November 25, 2014, originally issued to the Authority in the aggregate principal amount of $16,900,000, and currently outstanding in the aggregate principal amount of $16,835,000.

"*2014 Authority Loan Agreement*" means the Loan Agreement, dated as of October 1, 2014, by and between the City and the Authority, pursuant to which the 2014 Authority Bond was issued.

**Section 2. Certification of City's Authority to Issue Bonds as Additional Lien Obligations under the Authority Loan Agreements and Series 2015 Bond Ordinance**. The City is authorized under the Authority Loan Agreements and the Series 2015 Bond Ordinance to issue Additional Parity Obligations with a lien on the Net Revenues and payable from the Net

Revenues, which are on a parity with the lien of the Authority Bonds and Water Rights Notes, to refund the outstanding Parity Lien Obligations, including the Refunded Loan, without compliance with the requirements in such Authority Loan Agreements and Series 2015 Bond Ordinance, provided that the debt service payments on such refunding obligations do not exceed the debt service payments on the refunded obligations during any calendar year. The City hereby certifies, and has previously certified to the Authority, that it is expected to price the debt service payments on the Bonds so that they do not exceed the debt service payments on the Refunded Loan during any calendar year.

In the event that the pricing does not satisfy the condition set forth in the prior paragraph at pricing, the City will also be in compliance with the requirements in such Authority Loan Agreements and Series 2015 Bond Ordinance to issue Additional Parity Obligations and hereby certifies, and has previously certified to the Authority, that the Net Revenues for any 12 consecutive months out of the 18 months preceding the month in which the Bonds are to be issued are $6,829,147, which is at least equal to the sum of (a) 110% of the maximum annual debt service of all Parity Lien Obligations outstanding during such 12 month period and the Additional Parity Obligation to be issued in the form of the Bonds, and (b) 100% of maximum annual debt service of all other indebtedness secured by and payable from the Net Revenues, which sum totals $3,684,128. In addition, no more than 50% of the water and electric rates, fees, and charges for the products and services provided by the System, which are derived from connection fees were be included in Revenues for the purpose of such test.

In addition, the City is authorized to issue additional bonds so long as (1) no event of default (or any event which, once all notice or grace periods have passed, would constitute an event of default) under the Authority Loan Agreements exists unless such event of default shall be cured upon such issuance and (2) unless the debt service reserve fund is fully funded at the debt service reserve requirement (including the proposed issue) upon the issuance of such additional bonds, in either case unless permitted by the bond insurer in connection with the Authority Loan Agreements. No event of default exists under the Authority Loan Agreements and the debt service reserve funds under the Authority Loan Agreements are fully funded at their respective debt service reserve requirements, so the City is authorized to issue additional bonds hereunder.

**Section 3. Authorization and Purpose of Bonds.** Pursuant to and in accordance with the State Constitution, the Charter, the Act, the Refunding Act, the Authority Loan Agreements, and the Series 2015 Bond Ordinance, there shall be issued by the City, acting by and through its Electric, Water and Wastewater Utility Enterprise, the "Water Revenue Refunding Bonds, Series 2016" in the aggregate principal amount not to exceed $7,900,000 for the purpose of (a) refunding the Refunded Loan, (b) funding the Reserve Account or purchasing a Reserve Account Contract, and (c) paying the costs of issuance of the Bonds (including the premium for the Bond Insurance Policy, if any). All City officials and employees are hereby directed to take such actions as are necessary and appropriate to fulfill the obligations of the City under this Ordinance. The City shall deliver the Bonds in substantially the forms presented on final reading of this Ordinance with only such changes as are not inconsistent herewith; provided that such documents may be completed, corrected, or revised as deemed necessary by the parties thereto in order to carry out

the purposes of this Ordinance. The accomplishment of the refunding of the Refunded Loan is hereby authorized, approved, and ordered.

**Section 4. Pledge for Payment of the Bonds.**

(a) ***Pledge of Net Revenues.*** The principal of, premium, if any, and interest on the Bonds and Parity Lien Obligations at any time Outstanding shall be payable solely from the Net Revenues. The City irrevocably pledges and grants a lien (but not an exclusive lien) on the Net Revenues for the payment of the Bonds. The Owners of the Bonds may not look to any general or other fund of the City for the payment of the principal of or interest on the Bonds, except the funds and accounts pledged thereto pursuant to authority of this Ordinance, and the Bonds shall not constitute a debt or an indebtedness of the City within the meaning of any constitutional or statutory provision or limitation; nor shall they be considered or held to be a general obligation of the City.

(b) ***No Prohibition on Additional Security.*** Nothing herein shall prohibit the City from applying any legally available revenues that are not Net Revenues to the payment of the Bonds (and thereby subjecting the moneys so deposited to the pledge made and lien granted in paragraph (a) hereof).

(c) ***Perfection of Security Interest.*** The creation, perfection, enforcement, and priority of the pledge of revenues to secure or pay the Bonds as provided herein shall be governed by the Act. The revenues pledged for the payment of the Bonds, as received by or otherwise credited to the City, shall immediately be subject to the lien of such pledge without any physical delivery, filing, or further act. The lien of such pledge on the revenues pledged for payment of the Bonds and the obligation to perform the contractual provisions made herein shall be on parity with any or all other Additional Parity Obligations of the City. The lien of such pledge shall be valid, binding, and enforceable as against all persons having claims of any kind in tort, contract, or otherwise against the City irrespective of whether such persons have notice of such liens.

**Section 5. Bond Details.**

(a) ***Registered Form, Denominations, Original Dated Date and Numbering.*** The Bonds shall be issued as fully registered bonds in denominations of $5,000 or any integral multiple thereof, shall be dated as of the Dated Date, shall be consecutively numbered in the manner determined by the Paying Agent and shall be registered in the names of the Persons identified in the registration books of the City maintained by the Paying Agent.

(b) ***Maturity Dates, Principal Amounts and Interest Rates.*** The Bonds shall mature on the Principal Payment Date in the years and in the principal amounts, and shall bear interest at the rates per annum (calculated based on a 360-day year of twelve 30-day months) set forth in the Sale Certificate.

(c) ***Accrual and Dates of Payment of Interest.*** Interest on each series of the Bonds shall accrue at the rates set forth in the Sale Certificate from the later of the Dated

Date or the latest Interest Payment Date (or in the case of defaulted interest, the latest date) to which interest has been paid in full and shall be payable on each Interest Payment Date.

(d) ***Manner and Form of Payment***. Principal of and the final installment of interest on each Bond shall be payable to the Owner thereof upon presentation and surrender of such bond at the principal operations office of the Paying Agent or at such other location as identified by the Paying Agent. Interest (other than the final installment of interest) on each Bond shall be payable by check or draft of the Paying Agent mailed on the Interest Payment Date to the Owner thereof as of the Record Date. All payments of the principal of and interest on the Bonds shall be made in lawful money of the United States of America.

(e) ***Book-Entry Registration***. The Bonds shall be initially issued in the form of a single, certificated, fully registered Bond for each maturity. Upon initial issuance, the ownership of each such Bond shall be registered in the registration books kept by the Paying Agent in the name of Cede, and principal of and interest on the Bonds shall be paid to DTC in accordance with the DTC Blanket Letter of Representations; provided, however, if at any time the Paying Agent determines, and notifies the City of its determination, that DTC is no longer able to act as, or is no longer satisfactorily performing its duties as, securities depository for the Bonds, the City may, at its sole and absolute discretion, either (i) designate a substitute securities depository for DTC and reregister the Bonds as directed by such substitute securities depository or (ii) terminate the book-entry registration system and reregister the Bonds in the names of the Beneficial Owners thereof. Neither the City nor the Paying Agent shall have any liability to DTC, Cede, any substitute securities depository, any Beneficial Owner, any Person in whose name the Bonds are reregistered at the direction of any substitute securities depository, or any other Person for any action taken to implement the City's discretionary determination set forth above that is taken pursuant to any direction of or in reliance on any information provided by DTC, Cede, any substitute securities depository, any Beneficial Owner, or any Person in whose name the Bonds are reregistered.

(f) ***Final Determination of Bond Details***. The authority to determine other details of the Bonds is delegated to the Sale Delegate in the Section hereof entitled "Delegation and Parameters."

**Section 6. Delegation and Parameters.**

(a) ***Delegation***. The City Council hereby delegates to the Sale Delegate the authority to determine and set forth in the Sale Certificate: (i) the matters set forth in paragraph (b) hereof, subject to the applicable parameters set forth in paragraph (c) hereof; and (ii) any other matters that, in the judgment of the Sale Delegate, are necessary or convenient to be set forth in the Sale Certificate and are not inconsistent with the parameters set forth in paragraph (c) hereof.

(b) ***Sale Certificate***. The Sale Certificate for the Bonds shall set forth the following matters and other matters permitted to be set forth therein pursuant to paragraph (a) hereof, but each such matter must fall within the applicable parameters set forth in paragraph (c) hereof:

(i) the Dated Date of the Bonds;

(ii) the Principal Payment Date;

(iii) the Interest Payment Date(s);

(iv) the aggregate principal amount of the Bonds;

(v) the price at which the Bonds will be sold;

(vi) the amount of principal of the Bonds maturing in any particular year and the respective interest rates borne by the Bonds;

(vii) the Bonds which may be redeemed at the option of the City, the dates upon which such optional redemption may occur, and the prices at which such Bonds may be optionally redeemed;

(viii) the principal amounts, if any, of Bonds subject to mandatory sinking fund redemption, and the years in which such Bonds will be subject to such redemption;

(ix) the identity of the Original Purchaser;

(x) the identity of Bond Insurer, if any;

(xi) the Bonds, if any, constituting Insured Bonds; and

(xii) the definition of "Permitted Investments," to the extent required to cause the issuance of the Bond Insurance Policy.

(c) ***Parameters***. The authority delegated to the Sale Delegate by this Section shall be subject to the following parameters:

(i) in no event shall the Sale Delegate be authorized to execute the Sale Certificate after the date that is one year after the date of adoption of this Ordinance;

(ii) the aggregate principal amount of the Bonds shall not exceed $7,900,000;

(iii) the final maturity of each series of Bonds shall be no later than December 1, 2038; and

(iii) the present value savings associated with the refunding of the Refunding Loan shall not be less than 3.00%.

**Section 7. Form of the Bonds**. The Bonds shall be in substantially the form set forth in Appendix A hereto, with such changes thereto, not inconsistent herewith, as may be necessary or desirable and approved by the officials of the City executing the same (whose manual or facsimile signatures thereon shall constitute conclusive evidence of such approval). Each Bond shall recite that it is issued under the authority of the Act. Such recital shall conclusively impart full compliance with all provisions and limitations of such laws, and such Bond issued containing such recital shall be incontestable for any cause whatsoever after its delivery for value. Although attached as an appendix for the convenience of the reader, Appendix A is an integral part of this Ordinance and is incorporated herein as if set forth in full in the body of this Ordinance.

**Section 8. Execution, Authentication and Delivery of the Bonds.**

(a) ***Execution***. The Bonds shall be executed in the name and on behalf of the City with the manual or facsimile signature of the Mayor, shall bear a manual or facsimile of the seal of the City and shall be attested by the manual or facsimile signature of the City Clerk both of whom are hereby authorized and directed to prepare and execute the Bonds in accordance with the requirements hereof. Should any officer whose manual or facsimile signature appears on the Bonds cease to be such officer before delivery of any Bond, such manual or facsimile signature shall nevertheless be valid and sufficient for all purposes.

(b) ***Authentication***. When the Bonds have been duly executed, the officers of the City are authorized to, and shall, deliver the Bonds to the Paying Agent for authentication. No Bond shall be secured by or entitled to the benefit of this Ordinance, or shall be valid or obligatory for any purpose, unless the certificate of authentication of the Paying Agent has been manually executed by an authorized signatory of the Paying Agent. The executed certificate of authentication of the Paying Agent upon any Bond shall be conclusive evidence, and the only competent evidence, that such Bond has been properly authenticated hereunder.

(c) ***Delivery***. Upon the authentication of the Bonds, the Paying Agent shall deliver the same to DTC in accordance with the provisions of the DTC Blanket Letter of Representations. Upon receipt of the purchase price of the Bonds, the issuance of the approving opinion of Bond Counsel, and the satisfaction of other conditions established pursuant to the Bond Purchase Agreement, DTC shall be directed to release the Bonds to the Beneficial Owners.

**Section 9. Registration, Transfer and Exchange of the Bonds.**

(a) ***Registration***. The Paying Agent shall maintain registration books in which the ownership, transfer and exchange of Bonds shall be recorded. The person in whose name any Bond shall be registered on such registration books shall be deemed to be the absolute owner thereof for all purposes, whether or not payment on any Bond shall

be overdue, and neither the City nor the Paying Agent shall be affected by any notice or other information to the contrary.

(b) ***Transfer and Exchange***. The Bonds may be transferred or exchanged, at the principal operations office of the Paying Agent or at such other location as identified by the Paying Agent for a like aggregate principal amount of Bonds of other authorized denominations of the same maturity and interest rate, upon payment by the transferee of a transfer fee, any tax or governmental charge required to be paid with respect to such transfer or exchange and any cost of printing bonds in connection therewith. Upon surrender for transfer of any Bond, duly endorsed for transfer or accompanied by an assignment duly executed by the Owner or his or her attorney duly authorized in writing, the City shall execute and the Paying Agent shall authenticate and deliver in the name of the transferee a new Bond

(c) ***Limitations on Transfer***. The City and Paying Agent shall not be required to issue or transfer any Bonds: (i) during a period beginning at the close of business on the Record Date and ending at the opening of business on the first Business Day following the ensuing interest payment date or (ii) during the period beginning at the opening of business on a date 45 days prior to the date of any redemption of Bonds and ending at the opening of business on the first Business Day following the day on which the applicable notice of redemption is mailed. The Paying Agent shall not be required to transfer any Bonds selected or called for redemption.

**Section 10. Replacement of Lost, Destroyed or Stolen Bonds**. If any Bond shall become lost, apparently destroyed, stolen or wrongfully taken, it may be replaced in the form and tenor of the lost, destroyed, stolen or taken Bond and the City shall execute and the Paying Agent shall authenticate and deliver a replacement Bond upon the Owner furnishing, to the satisfaction of the Paying Agent: (a) proof of ownership (which shall be shown by the registration books of the Paying Agent); (b) proof of loss, destruction or theft; (c) an indemnity to the City and the Paying Agent with respect to the Bond lost, destroyed or taken; and (d) payment of the cost of preparing and executing the new Bond or Bonds.

**Section 11. Redemption of Bonds Prior to Maturity.**

(a) ***Optional Redemption***. The Bonds shall be subject to redemption at the option of the City, in whole or in part, and if in part in such order of maturities as the City shall determine and by lot within a maturity on such dates as set forth in the Sale Certificate.

(b) ***Mandatory Sinking Fund Redemption***. All or any principal amount of the Bonds may be subject to mandatory sinking fund redemption by lot on the Principal Payment Date in the years and in the principal amounts specified in the Sale Certificate, at a redemption price equal to the principal amount thereof (with no redemption premium), plus accrued interest to the redemption date.

At its option, to be exercised on or before the 45th day next preceding each sinking fund redemption date, the City may (i) deliver to the Paying Agent for cancellation any Bonds with the same maturity date as the Bonds subject to such sinking fund redemption and (ii) receive a credit in respect of its sinking fund redemption obligation for any Bonds with the same maturity date as the Bonds subject to such sinking fund redemption which prior to such date have been redeemed (otherwise than through the operation of the sinking fund) and cancelled by the Paying Agent and not theretofore applied as a credit against any sinking fund redemption obligation. Each Bond so delivered or previously redeemed shall be credited by the Paying Agent at the principal amount thereof to the obligation of the City on such sinking fund redemption date, and the principal amount of Bonds to be redeemed by operation of such sinking fund on such date shall be accordingly reduced.

(c) ***Redemption Procedures***. Notice of any redemption of Bonds shall be given by the Paying Agent in the name of the City by sending a copy of such notice by first class, postage prepaid mail, or by electronic means to DTC or its successor not less than 30 days prior to the redemption date, to the Owner of each Bond being redeemed. Such notice shall specify the number or numbers of the Bonds so to be redeemed (if redemption shall be in part) and the redemption date. If any Bond shall have been duly called for redemption and if, on or before the redemption date, there shall have been deposited with the Paying Agent in accordance with this Ordinance funds sufficient to pay the redemption price of such Bond on the redemption date, then such Bond shall become due and payable at such redemption date, and from and after such date interest will cease to accrue thereon. Failure to deliver any redemption notice or any defect in any redemption notice shall not affect the validity of the proceeding for the redemption of Bonds with respect to which such failure or defect did not occur. Any Bond redeemed prior to its maturity by prior redemption or otherwise shall not be reissued and shall be cancelled.

**Section 12. Reaffirmation of Funds and Accounts; Creation of Accounts.**

(a) ***Reaffirmation of Existing Funds and Accounts***. There is hereby reaffirmed the following existing fund of the City: the Utility Fund.

(b) ***Creation of Accounts in Utility Fund***. There are hereby created and established within the Utility Fund, in addition to other accounts which are established in said fund, the Bond Account, the Reserve Account, and the Cost of Issuance Account. In accordance with generally accepted accounting principles, for the purpose of accounting for the moneys provided for in this Ordinance the Finance Director may create offsetting revenue and expense accounts not inconsistent with the provisions hereof, all as may be determined by the Finance Director.

**Section 13. Application of Bond Proceeds**. Upon payment to the City of the purchase price of the Bonds by the Original Purchaser, the proceeds received by the City from the sale of the Bonds shall be applied as a supplemental appropriation of the City for the payment of the costs of issuance of the Bonds and as follows:

(a) To the Reserve Account, the amount necessary to fund the Reserve Account or purchase a Reserve Account Contract in the amount of the Reserve Account Requirement allocable to the Bonds;

(b) To the Bond Account, the accrued interest on the Bonds from the Dated Date to the date of issuance and capitalized interest on the Bonds, if any;

(c) To the Authority, the amount necessary to refund the Refunded Loan; and

(d) To the Cost of Issuance Account, the amount necessary to pay the costs of issuance of the Bonds.

**Section 14. Reserved.**

**Section 15. Deposit of Revenues**. The City shall deposit to the Utility Fund all Revenues immediately upon receipt. The City shall pay from the Utility Fund all Operation and Maintenance Expenses as they become due and payable; provided that such Net Revenues available for debt service will be limited to 50% of tap fee revenue. After such payments, the City shall apply the Net Revenues in the following order of priority:

FIRST, on a pro rata basis, to the credit of the Bond Account, the amounts required by the Section hereof entitled "Bond Account," and to the credit of any other account established for the payment of the principal of, premium if any, and interest on Parity Lien Obligations, the amounts required by the instruments authorizing or controlling the payment of such Parity Lien Obligations;

SECOND, to the credit of the Reserve Account, the amounts required by the Section hereof entitled "Reserve Account" and to the credit of any other account established as a reserve account securing the payment of the principal of, premium if any, and interest on Parity Lien Obligations, the amounts required by the instruments authorizing or controlling the payment of such Parity Lien Obligations;

THIRD, to the credit of any other fund or account hereafter established for the payment of the principal of, premium if any, and interest on any Subordinate Lien Obligations secured by the Net Revenues, including any sinking fund, reserve fund, or similar fund or account established therefor, the amounts required by the ordinance or other enactment authorizing issuance of said Subordinate Lien Obligations; and

FOURTH, to the credit of any other fund or account as may be designated by the City, to be used for any lawful purpose, any moneys remaining in the Utility Fund after the payments and accumulations set forth in FIRST through THIRD hereof.

**Section 16. Bond Account.**

(a) ***Use of Moneys in Bond Account***. Moneys deposited in the Bond Account shall be used solely for the purpose of paying the principal of, premium, if any, and interest on the Bonds.

(b) ***Deposits to Bond Account.*** On or before the last day of each month, commencing in the month next succeeding the date of issuance of the Bonds, the City shall deposit to the Bond Account from the Net Revenues, an amount equal to the Pro Rata Portion of the interest and principal to come due on the Bonds on the next succeeding Interest Payment Date and Principal Payment Date, respectively. All deposits to the Bond Account shall first be allocated to the payment of interest to come due on the Bonds.

**Section 17. Reserve Account.**

(a) ***Use of Moneys in Reserve Account.*** Moneys in the Reserve Account shall be used, if necessary, only to prevent a default in the payment of the principal of, premium, if any, and interest on the Bonds when due. Moneys on deposit in the Reserve Account or proceeds of the liquidation of Permitted Investments on deposit in the Reserve Account shall be transferred to the Bond Account on any date on which a payment of principal of, premium, if any, or interest on the Bonds is due to the extent the amount on deposit in the Bond Account is insufficient to make such payment.

(b) ***Funding and Maintenance of Reserve Account Requirement.*** The Reserve Account Requirement for the Bonds shall be funded and maintained by any one of or any combination of (i) cash; (ii) Permitted Investments; and (iii) a Reserve Account Contract which provides for payments when and as required for purposes of the applicable reserve account and is issued by an obligor whose obligations such as the Reserve Account Contract are either (A) rated by a rating agency as investment grade or (B) if a rating has been obtained on such Bonds whose obligations are rated by each rating agency that then maintains a rating on the Bonds in a category (or comparable classification) equal to or higher than the category, if any, in which the Bonds are rated. To the extent that the Reserve Account Requirement for any series of Bonds is funded from Permitted Investments, such investments shall have an aggregate weighted term to maturity not greater than five years.

(c) ***Valuation of Deposits.*** Cash shall satisfy the Reserve Account Requirement for the Bonds by the amount of cash on deposit. Permitted Investments shall satisfy the Reserve Account Requirement for the Bonds by the value of such investments. The value of each Permitted Investment on deposit in the Reserve Account shall be (i) its purchase price from the date of purchase until the first date thereafter on which the Reserve Account Requirement is calculated pursuant to paragraph (d) hereof and (ii) following each date on which the Reserve Account Requirement is calculated pursuant to paragraph (d) hereof until the next date on which the Reserve Account Requirement is so calculated, its fair market value determined as of such calculation date. A Reserve Account Contract shall satisfy the Reserve Account Requirement for the Bonds by the amount payable to the City pursuant to such contract.

(d) ***Calculation of Reserve Account Requirement and Transfers Resulting from Calculation.*** The Reserve Account Requirement for the Bonds shall be calculated as of (i) the date of issuance of the Bonds and (ii) not less than every five years. If at any

time the calculated amount of the Reserve Account is less than the Reserve Account Requirement or transfers are made from the Reserve Account as provided in paragraph (a) hereof, then the City shall deposit to the Reserve Account from the Net Revenues, amounts sufficient to bring the amounts deposited in the Reserve Account to the Reserve Account Requirement for the Bonds. If at any time the calculated amounts of the Reserve Account are more than the Reserve Account Requirement for the Bonds, then the City shall transfer from the Reserve Account to the Bond Account any amounts that are in excess of the Reserve Account Requirement for the Bonds. Such deposits shall be made as soon as possible after such use or calculation, but in accordance with and subject to the limitations of the Section hereof entitled "Deposit of Revenues."

(e) ***Transfer of Interest Income to Bond Account.*** The investment of moneys deposited in the Reserve Account shall be subject to the covenants and provisions of the Section hereof entitled "Covenants Regarding Exclusion of Interest on Bonds from Gross Income for Federal Income Tax Purposes." Except to the extent otherwise required by such section, interest income from the investment or reinvestment of moneys deposited in the Reserve Account shall be transferred to the Bond Account.

**Section 18. Cost of Issuance Account.** All costs and expenses incurred in connection with the issuance and payment of the Bonds shall be paid from the proceeds of the Bonds deposited in the Cost of Issuance Account. After payment of costs of issuance of the Bonds, any amounts remaining the in Cost of Issuance Account are to be deposited in the Bond Account for use in accordance with the Section hereof entitled "Bond Account."

**Section 19. Investments**. Moneys deposited in the Bond Account, and any moneys held by the Paying Agent with respect to the Bonds, shall be invested in Permitted Investments, provided that the investment of such moneys shall be subject to the covenants and provisions of the Section hereof entitled "Covenants Regarding Exclusion of Interest on Bonds from Gross Income for Federal Income Tax Purposes." Unless otherwise provided herein, all interest income from the investment or reinvestment of moneys credited to any account or subaccount established herein shall remain in and become part of such account or subaccount.

**Section 20. Conditions to Issuance of Additional Senior, Parity, and Subordinate Lien Obligations.**

(a) ***Senior Lien Obligations.*** The City covenants that it will not issue any obligations payable from the Net Revenues that are superior to the lien of the Bonds or any Parity Lien Obligations on the Net Revenues.

(b) ***Parity Lien Obligations.*** In addition, the City covenants that it will not issue any Additional Parity Obligations with a lien on the Net Revenues and payable from the Net Revenues which is on a parity with the lien of the Bonds and the Parity Lien Obligations, unless the City certifies that Net Revenues for any 12 consecutive months out of the 18 months preceding the month in which such Additional Parity Obligations are to be issued is at least equal to the sum (a) of 110% of the maximum annual debt service of (i) the Bonds, (ii) all Parity Lien Obligations outstanding during

such 12 month period, and (iii) such proposed Additional Parity Obligations to be issued, and (b) 100% of maximum annual debt service of all other indebtedness secured by and payable from the Net Revenues; provided, however, that no more than 50% of the water and electric rates, fees and charges for the products and services provided by the System, which are derived from connection fees shall be included in Revenues for the purposes of this Section. Net Revenues for the purpose of the preceding sentence may be adjusted to reflect any rate increases adopted prior to the issuance of such Additional Parity Obligations. Notwithstanding the foregoing, the City may issue Additional Parity Obligations to refund the Bonds or outstanding Parity Lien Obligations without compliance with the requirements stated above, provided that the debt service payments on such refunding obligations do not exceed the debt service payments on the refunded obligations during any calendar year.

(c) ***Subordinate Lien Obligations.*** In addition, the City covenants that it will not issue any obligations payable from the Net Revenues that are subordinate to the lien of the Bonds and the Parity Lien Obligations on the Net Revenues unless the City certifies that for any 12 consecutive months out of the 18 months preceding the month in which such obligations are to be issued Net Revenues were at least 100% of the maximum annual debt service on all indebtedness outstanding during such period which is payable from Net Revenues.

**Section 21. Additional General Covenants and Representations**. In addition to the other covenants of the City contained herein, the City hereby further covenants and represents for the benefit of Owners of the Bonds that:

(a) ***Rate Covenant.*** The City shall establish and collect rates and charges for the use or the sale of the products and services of the System, which together with other moneys available therefor, are expected to produce Revenues for each calendar year which will be at least sufficient for such calendar year to pay the sum of:

(i) all amounts estimated to be required to pay Operation and Maintenance Expenses during such calendar year;

(ii) a sum equal to 110% of the debt service due on the Bonds for such calendar year and debt service coming due during such calendar year on any indebtedness payable on the Parity Lien Obligations, in each case computed as of the beginning of such calendar year;

(iii) the amount, if any, to be paid during such calendar year into any debt service reserve account;

(iv) a sum equal to the debt service on any subordinated debt for such calendar year computed as of the beginning of such calendar year; and

(v) amounts necessary to pay and discharge all charges and liens payable out of the Revenues during such calendar year;

Provided, however, that no more than 50% of the water and electric rates, fees and charges for the products and services provided by the System, which are derived from connection fees shall be included in Revenues for the purposes of this Rate Covenant.

(b) ***Rate Study.*** In the event that the Revenues collected during a fiscal year are not sufficient to meet the requirements set forth in the Rate Covenant contained in paragraph (a) hereof, the City shall, within 90 days of the end of such fiscal year, cause an independent firm of accountants or consulting engineers, to prepare a rate study for the purpose of recommending a schedule of rates, fees and charges for the use of the System which in the opinion of the firm conducting the study will be sufficient to provide Revenues to be collected in the next succeeding fiscal year which will provide compliance with the Rate Covenant described in paragraph (a) above. The City shall within six months of receipt of such study, adopt rates, fees and charges for the use of the System, based upon the recommendations contained in such study, which provide compliance with said Rate Covenant.

(c) ***Efficient Operations***. The City covenants and agrees (i) to maintain the System in good repair, working order and operating condition; (ii) at all times operate the properties of the System and any business in connection therewith in an efficient manner; (iii) from time to time make all necessary and proper repairs, renewals, replacements, additions, betterments and improvements with respect to the System so that at all times the business carried on in connection therewith shall be properly and advantageously conducted; provided, however, this covenant shall not be construed as requiring the City to expend any funds which are derived from sources other than the Revenues and provided further that nothing herein shall be construed as preventing the City from doing so.

(d) ***Operations and Maintenance Reserve.*** In addition to the Reserve Account Requirement, the City shall maintain an operations and maintenance reserve in an amount equal to three months of operation and maintenance expenses excluding depreciation of the System as set forth in the annual budget for the current fiscal year. Said reserve may be in the form of unobligated fund balances or other unobligated cash or securities (i.e., capital reserves) or may be in a separate segregated fund and shall be maintained as a continuing reserve for payment of any lawful purpose relating to the System. If the operations and maintenance reserves fall below this requirement, the shortfall shall be made up in 24 substantially equal monthly installments beginning the second month after such shortfall or the date of delivery.

(e) ***Disposition of the System.*** Except for the disposal of assets of the System up to a cumulative amount of $2,000,000, and except for the disposal of any portion of the System which the City determines is no longer necessary for the operation of the System, the City shall not sell, lease, abandon or otherwise dispose of all or substantially all of the System, or any other component of the System which provides revenues to provide for the payment of the Bonds or any Parity Lien Obligations, except in accordance with the Authority Loan Agreements and the Series 2015 Bond Ordinance, and, in addition, shall not so sell, lease, abandon or otherwise dispose of the same unless

the City shall determine that such sale, lease, abandonment or other disposition will not adversely affect the City's ability to meet its duties, covenants, obligations and agreements under the Ordinance, will not adversely affect the value of the Net Revenues as security for the payment of Bonds and interest thereon, and adversely affect the eligibility of interest on Bonds then Outstanding for exclusion from gross income for purposes of Federal income taxation, and the City obtains the consent of Owners of not less than the majority in principal amount of the applicable Bonds then Outstanding to the sale, lease, abandonment, or disposition of the System.

(f) ***Billing and Enforcement***. The City will promptly render bills for services furnished by or the use of the System, shall use all legal means to assure prompt payment thereof, shall take such action as may be necessary to make delinquent rates, fees, and charges of the System a lien upon the real property served, and to the extent permitted by law, shall discontinue service to any user who becomes delinquent in the payment of such charges until the delinquency and all interest, costs, and expenses incident thereto have been paid in full.

(g) ***Records; Accounts***. The City shall keep accurate records and accounts for the System (the "System Records"), separate and distinct from its other records and accounts (the "General Records"). Such System Records shall be maintained in accordance with GAAP and shall be audited annually by an independent accountant, which audit may be part of the annual audit of the General Records of the City. Such System Records and General Records shall be filed and recorded in the places, time, and manner provided by law and shall be on file in the office of the City Clerk for inspection.

(h) ***Insurance***. The City shall maintain or cause to be maintained, in force, insurance policies with responsible insurers or self-insurance programs providing against risk of direct physical loss, damage or destruction of the System, at least to the extent that similar insurance is usually carried by utilities constructing, operating and maintaining facilities of the nature of the System, including liability coverage, all to the extent available at reasonable cost. Nothing herein shall be deemed to preclude the City from exerting against any party, a defense which may be available to the City, including, without limitation, a defense of sovereign immunity, a defense under and pursuant to the Colorado Governmental Immunity Act (Section 24-10-101, et seq., C.R.S.), or under the laws of the United States or other laws of the State.

(i) ***Eminent Domain***. In the event of any loss or damage to the System or in the event part or all of the System is taken by the exercise of a power of eminent domain, the insurance proceeds or the condemnation award shall be used for restoring, replacing, or repairing the property lost, damaged, or taken, and the remainder thereof, if any, shall be considered as Revenues with respect to the System; provided however, that if the City Council determines that the operation of the System and the security for the Bonds will not be adversely affected thereby, the City Council may determine not to restore, replace, or repair the property lost, damaged, or taken and all of the insurance proceeds or condemnation award shall be considered as Revenues with respect to the System.

(j) ***Enterprise Status***. The City Council hereby determines that the Electric, Water and Wastewater Utility Enterprise is an enterprise within the meaning of Article X, Section 20 of the State Constitution. The City has and will continue to maintain the System as an "enterprise" within the meaning Article X, Section 20 of the State Constitution.

(k) ***No Legal or Equitable Action***. In accordance with Section 11-57-212, C.R.S., no legal or equitable action can be brought with respect to any legislative acts or proceedings in connection with the authorization or issuance of the Bonds more than 30 days after the issuance or authorization of such securities, whichever occurs later.

(l) ***Swap Agreements***. Any interest rate exchange agreement ("Swap Agreement") entered into by the City secured by and payable from the Net Revenues shall meet the following conditions: (i) the Swap Agreement must be entered into to manage interest costs related to, or a hedge against (a) assets then held, or (b) debt then outstanding, or (c) debt reasonably expected to be issued within the next 12 months, and (ii) the Swap Agreement shall not contain any leverage element or multiplier component greater than 1.0x unless there is a matching hedge arrangement which effectively off-sets the exposure from any such element or component. Any uninsured net settlement, breakage or other termination amount then in effect shall be subordinate to debt service on the Bonds and the Parity Lien Obligations. The City shall not terminate a Swap Agreement unless it demonstrates that prior to the payment of any such termination amount that such payment will not cause the City to be in default under any documents authorizing the issuance of the Bonds or the Parity Lien Obligations, including, but not limited to, any such monetary obligations thereunder. All counterparties or guarantors to any Swap Agreement must have a rating of at least "A-" and "A3" by S&P and Moody's. If the counterparty or guarantor's rating falls below "A-" or "A3" by either S&P or Moody's, the counterparty or guarantor shall execute a credit support annex to the Swap Agreement. If the counterparty or the guarantor's long-term unsecured rating falls below "Baal" or "BBB+" by either Moody's or S&P, a replacement counterparty or guarantor shall be required.

**Section 22. Covenants Regarding Exclusion of Interest on Bonds from Gross Income for Federal Income Tax Purposes**. For purposes of ensuring that the interest on the Bonds is and remains excluded from gross income for federal income tax purposes, the City hereby covenants that:

(a) ***Prohibited Actions.***

(i) The City covenants and agrees that it shall not take or permit any action or fail to take any action which action or omission would result in the loss of the exclusion of interest on any Bonds from gross income for federal income tax purposes pursuant to Section 103(a) of the Code.

(ii) The City covenants and agrees that it shall not take or permit any action or fail to take any action, which action or omission would cause the Bonds to be "private activity bonds" within the meaning of Section 141(a) of the Code.

(iii) The City covenants and agrees that it shall not directly or indirectly use or permit the use of any proceeds of the Bonds (or amounts treated as replaced with such proceeds) or any other funds, or take or permit any action or fail to take any action, which use, action or omission would cause the Bonds to be "arbitrage bonds" within the meaning of Section 148(a) of the Code.

(iv) Notwithstanding anything to the contrary, as long as it necessary to maintain the exclusion of interest on the Bonds from gross income for Federal income tax purposes, the covenants contained in this paragraph (a) shall survive the payment of the Bonds, including any defeasance pursuant to the Section hereof entitled "Defeasance."

(v) The City hereby certifies and represents that it has complied with the requirements of Treasury Regulation Section 1.150-2 in this Ordinance or other official action with regard to proceeds of the Bonds, if any, to be used to reimburse the City for expenses incurred by the City prior to the issuance of the Bonds. In the event that any of the proceeds of the Bonds are to be used to pay debt service on any prior issue of the City, and any of the proceeds of such prior issue (or any obligations refinanced by such prior issue) were used to reimburse the City for expenditures incurred prior to the issuance of the prior issue (or refinanced obligations, as the case may be), the City hereby certifies and represents that the allocation of such proceeds to the reimbursed expenditure was a valid expenditure under the applicable law on reimbursement expenditures on the date of issue of the prior issue (or the refinanced obligations), as required by Federal Income Tax Regulation Section 1.150-2(g)(2).

(b) ***Affirmative Actions.*** The City will at all times do and perform all acts permitted by law that are necessary in order to assure that interest paid by the City on the Bonds shall not be includible in gross income for federal income tax purposes under the Code or any other valid provision of law. In particular, but without limitation, the City represents, warrants and covenants to comply with the following rules unless it receives an opinion of Bond Counsel stating that such compliance is not necessary: (i) gross proceeds of the Bonds will not be used in a manner that will cause the Bonds to be considered "private activity bonds" within the meaning of the Code, (ii) the Bonds are not and will not become directly or indirectly "federally guaranteed" and (iii) the City

will timely file Internal Revenue Form 8038-G, which shall contain the information required to be filed pursuant to Section 149(e) of the Code.

(c) ***Letter of Instructions***. The City will comply with the Letter of Instructions delivered to it on the date of issuance of the Bonds, including but not limited by the provisions of the Letter of Instructions regarding the application and investment of Bond proceeds, the calculations, the deposits, the disbursements, the investments and the retention of records described in the Letter of Instructions; provided that, in the event the original Letter of Instructions is superseded or amended by a new Letter of Instructions drafted by, and accompanied by an opinion of Bond Counsel stating that the use of the new Letter of Instructions will not cause the interest on the Bonds to become includible in gross income for federal income tax purposes, the City will thereafter comply with the new Letter of Instructions.

(d) ***Designation of Bonds as Qualified Tax-Exempt Obligations***. In the event that the principal amount of the Bonds issued, plus any premium received by the City from the sale of the Bonds, is less than $10,000,000, the City designates the Bonds as qualified tax-exempt obligations within the meaning of Section 265(b)(3) of the Code. The City covenants that in such event the aggregate face amount of all tax-exempt obligations issued by the City (plus any applicable premium), together with governmental entities which derive their issuing authority from the City or are subject to substantial control by the City, shall not be more than $10,000,000 during the calendar year in which the Bonds are issued. The City recognizes that such tax-exempt obligations include notes, leases, loans and warrants, as well as bonds. The City further recognizes that any bank, thrift institution or other financial institution that owns the Bonds may rely on the City's designation of the Bonds as qualified tax-exempt obligations for the purpose of obtaining a deduction for 80% of that portion of such institution's interest expense allocable to interest on the Bonds.

**Section 23. Authorization of Bond Insurance**. The Financial Advisor may request, on behalf of the City, the submittal of bids to issue the Bond Insurance Policy. In the event that the Sale Delegate determines, based in part upon information provided by the Financial Advisor, that the premium bid for issuance of the Bond Insurance Policy is less than the interest cost savings to be realized by the City as a result of the issuance of the Bond Insurance Policy, the City Council hereby delegates to the Sale Delegate the authority to execute the Commitment with the Bond Insurer designated by the Sale Delegate, provided that the Bond Insurer shall be listed in The Bond Buyer's Municipal Marketplace Directory, published by Thomson Media. The officers of the City are also hereby authorized and directed to take all actions necessary to cause the Bond Insurer to issue the Bond Insurance Policy in accordance with the Commitment, including without limitation, payment of the premium due in connection therewith and entering into any authorizing agreement and undertaking any obligations not inconsistent herewith necessary to cause the issuance of the Bond Insurance Policy. The execution of the Commitment by the Sale Delegate or appropriate officer of the City is hereby ratified and approved. The Sale Delegate is also authorized to set forth in the Sale Certificate such terms not inconsistent with the terms hereof as may be required by the Bond Insurer to cause the issuance of the Bond Insurance Policy. The provisions set forth in the Sale Certificate, including but not limited to provisions required in

connection with the issuance of the Bond Insurance Policy, are hereby incorporated by reference into this Ordinance.

**Section 24. Obligation to Provide Continuing Disclosure**. The City shall undertake for the benefit of the Owners of the Bonds, to provide continuing disclosure pursuant to the Continuing Disclosure Undertaking, a copy of which has been presented to and is hereby approved by the City Council. The City Council also hereby authorizes, designates and directs the Finance Director to prepare on the City's behalf, subject to review and approval by any officer of the City Council, the filings required by the Continuing Disclosure Undertaking.

**Section 25. Defeasance**. Any Bond shall not be deemed to be Outstanding hereunder if it shall have been paid and cancelled or if cash or Federal Securities shall have been deposited in trust for the payment thereof (whether upon or prior to the maturity of such Bond, but if such Bond is to be paid prior to maturity, the City shall have given the Paying Agent irrevocable directions to give notice of redemption as required by this Ordinance, or such notice shall have been given in accordance with this Ordinance). In computing the amount of the deposit described above, the City may include interest to be earned on the Federal Securities. If less than all the Bonds are to be defeased pursuant to this Section, the City, in its sole discretion, may select which of the Bonds shall be defeased.

Notwithstanding anything herein to the contrary, in the event that the principal and/or interest and premium, if any, due on any Insured Bond shall be paid by the Bond Insurer for such Insured Bond pursuant to the related Bond Insurance Policy, such Insured Bond shall remain Outstanding for all purposes, not be defeased or otherwise satisfied and not be considered paid by the City, and all covenants, agreements and other obligations of the City to the Owner of such Insured Bond shall continue to exist and shall run to the benefit of such Bond Insurer, and such Bond Insurer shall be subrogated to the rights of such Owner.

**Section 26. Events of Default.** Each of the following events constitutes an Event of Default:

(a) failure to make any payment of principal of, premium, if any, or interest on the Bonds when due hereunder;

(b) failure to make, or cause to be made, any required payments of principal of, redemption premium, if any, and interest on any Parity Lien Obligations;

(c) failure by the City to observe and perform any duty, covenant, obligation or agreement on its part to be observed or performed under this Ordinance, other than as referred to in paragraph (a) hereof and other than a failure to comply with the provisions of the Section hereof entitled "Obligation to Provide Continuing Disclosure," which failure shall continue for a period of 30 days after written notice, specifying such failure and requesting that it be remedied, is given to the City Attorney of the City by the Paying Agent, unless the Paying Agent shall agree in writing to an extension of such time prior to its expiration; provided, however, that if the failure stated in such notice is correctable but cannot be corrected within the applicable period the Paying Agent may not

unreasonably withhold its consent to an extension of such time up to 60 days from the delivery of the written notice referred to above if corrective action is instituted by the City within the applicable period and diligently pursued until the Event of Default is corrected; and

(d) a petition is filed by or against the City under any federal or state bankruptcy or insolvency law or other similar law in effect on the date of this Ordinance or thereafter enacted, unless in the case of any such petition filed against the City such petition shall be dismissed within 30 days after such filing and such dismissal shall be final and not subject to appeal; or the City shall become insolvent or bankrupt or make an assignment for the benefit of its creditors; or a custodian (including, without limitation, a receiver, liquidator or trustee of the City or any of its property) shall be appointed by court order to take possession of the City or its property or assets if such order remains in effect or such possession continues for more than 30 days.

**Section 27. Notice of Default.** The City shall give the Paying Agent prompt telephonic notice of the occurrence of any Event of Default referred to in paragraph (d) of the Section hereof entitled "Events of Default," and of the occurrence of any other event or condition that constitutes an Event of Default at such time as any senior administrative or financial officer of the City becomes aware of the existence thereof. Any telephonic notice pursuant to this Section shall be confirmed in writing by the end of the next Business Day.

**Section 28. Remedies for Events of Default.**

(a) ***Remedies***. Whenever an Event of Default referred to the Section hereof entitled "Events of Default" shall have occurred and be continuing, the Owners of not less than 25% in principal amount of the applicable Bonds then Outstanding have the right to take or to direct the Paying Agent to take any action permitted or required pursuant to the Ordinance and to take whatever other action at law or in equity may appear necessary or desirable to collect the amounts then due and thereafter to become due hereunder or to enforce the performance and observance of any duty, covenant, obligation or agreement of the City hereunder, including, without limitation, to obtain ex parte the appointment of a receiver of the System.

(b) ***Attorney's Fees and Other Expenses.*** The City shall on demand pay to the Paying Agent the reasonable fees and expenses of attorneys and other reasonable fees and expenses (including without limitation the reasonably allocated costs of in-house counsel and legal staff) incurred by either of them in the collection of any sum due hereunder or in the enforcement of performance or observation of any other duties, covenants, obligations or agreements of the City.

(c) ***Application of Moneys.*** Any moneys collected by the Paying Agent pursuant to paragraph (a) hereof shall be applied (i) first, to pay any attorney's fees or other fees and expenses owed by the City pursuant to paragraph (b) hereof; (ii) second, pro rata, to pay interest due and payable on the Bonds or the Parity Lien Obligations; (iii) third, pro rata, to pay principal due and payable on the Bonds or the Parity Lien

Obligations; (iv) fourth, to pay any other amounts due and payable hereunder; and (v) fifth, to pay interest and principal on the Bonds and the Parity Lien Obligations and other amounts payable hereunder as such amounts become due and payable.

(d) ***Remedy Exclusive; Waiver; Notice.*** No remedy herein conferred upon or reserved to the Paying Agent is intended to be exclusive and every such remedy shall be cumulative and shall be in addition to every other remedy given under this Ordinance or now or hereafter existing at law or in equity. No delay or omission to exercise any right, remedy or power accruing upon any Event of Default shall impair any such right, remedy or power or shall be construed to be a waiver thereof, but any such right, remedy or power may be exercised from time to time and as often as may be deemed expedient. In order to entitle the Paying Agent to exercise any remedy reserved to it in this Section, it shall not be necessary to give any notice, other than such notice as may be required in this Section.

**Section 29. Execution of Documents.** The Mayor, the Mayor Pro Tem, the City Clerk and all other officers, officials and employees of the City are hereby authorized and directed to execute the Bonds and all documents and certificates necessary or desirable to effectuate the issuance of the Bonds contemplated by this Ordinance and as may be required in connection with the issuance of the Bonds. In addition, the City Manager, the Utility Director and the Finance Director are hereby designated as authorized officers to sign all other documents in connection with or furtherance of the foregoing documents.

**Section 30. Amendment of Ordinance.**

(a) ***Amendments Permitted without Notice to or Consent of Owners***. The City may, without the consent of or notice to the Owners of the Bonds, adopt one or more ordinances amending or supplementing this Ordinance, which ordinances shall thereafter become a part hereof, for any one or more or all of the following purposes:

(i) to cure any ambiguity or to cure, correct or supplement any defect or inconsistent provision of this Ordinance;

(ii) to subject to this Ordinance additional revenues, properties or collateral;

(iii) to facilitate the designation of a substitute securities depository or to terminate the book-entry registration system for the Bonds in accordance with the Section hereof entitled "Bond Details";

(iv) to facilitate the issuance of Parity Lien Obligations permitted to be issued pursuant to the Section hereof entitled "Additional Senior, Parity, and Subordinate Lien Obligations";

(v) to facilitate the funding of the Reserve Account or the substitution of one source of funding of the Reserve Account for another permitted source in accordance with the Section hereof entitled "Reserve Account"; or

(vi) to make any other change that does not materially adversely affect the Owners of the Bonds or the Parity Lien Obligations.

(b) ***Amendments Requiring Notice to and Consent of Owners***. Except for amendments permitted by paragraph (a) hereof, this Ordinance may only be amended (i) by an ordinance of the City amending or supplementing this Ordinance (which, after the consents required therefor, shall become a part hereof); and (ii) with the written consent of the Owners of at least 66-2/3% in aggregate principal amount of the Bonds then Outstanding; provided that any amendment that makes any of the following changes with respect to any Bond shall not be effective without the written consent of the Owner of such bond: (A) a change in the maturity of such bond; (B) a reduction of the interest rate on such bond; (C) a change in the terms of redemption of such bond; (D) a delay in the payment of principal of, premium, if any, or interest on such bond; (E) the creation of any pledge of or lien upon any revenues or moneys pledged for the payment of such bond hereunder that is superior to the pledge and lien for the payment of such bond hereunder; (F) a relaxation of the conditions to the issuance of Parity Lien Obligations or to the creation of any pledge of or lien upon any revenues or moneys pledged for the payment of such bond hereunder that is equal to or on a parity with the pledge and lien for the payment of such bond hereunder; (G) a reduction of the principal amount or percentage of Bonds whose consent is required for an amendment to this Ordinance; or (H) the establishment of a priority or preference for the payment of any amount due with respect to any other Bond over such Bond.

(c) ***Procedure for Notifying and Obtaining Consent of Owners***. Whenever the consent of an Owner or Owners of Bonds or the Bond Insurer, if any, is required under paragraph (b) hereof, the City shall mail a notice to such Owner or Owners at their addresses as set forth in the registration books maintained by the Paying Agent, the Bond Insurer, the Original Purchaser, and the Financial Advisor, which notice shall briefly describe the proposed amendment and state that a copy of the amendment is on file in the office of the City Clerk for inspection. Any consent of any Owner of any Bond obtained with respect to an amendment shall be in writing and shall be final and not subject to withdrawal, rescission or modification for a period of 60 days after it is delivered to the City unless another time period is stated for such purpose in the notice mailed pursuant to this paragraph.

**Section 31. Application of Act.** Pursuant to the Act, the City Council elects to apply all of the provisions of the Act to the issuance of the Bonds. Pursuant to Section 11-57-210, C.R.S., the Bonds shall contain a recital that they are issued pursuant to certain provisions of the Act. Such recital shall be conclusive evidence of the validity and the regularity of the issuance of the Bonds after their delivery for value. Pursuant to Section 11-57-212, C.R.S., no legal or equitable action brought with respect to any legislative acts or proceedings in connection with the authorization or issuance of the Bonds shall be commenced more than 30 days after the authorization of such securities. Pursuant to Section 11-57-209, C.R.S., if a member of the City Council, or any officer or agent of the City acts in good faith, no civil recourse shall be available against such member, officer or agent for payment of the principal, interest or prior redemption premiums, if any, on the Bonds. Such recourse shall not be available either directly or indirectly

through the City Council or the City, or otherwise, whether by virtue of any constitution, statute, rule of law, enforcement of penalty or otherwise. By the acceptance of the Bonds and as a part of the consideration of their sale or purchase, any Person purchasing or selling such Bond specifically waives any such recourse.

**Section 32. Provisions Relating to Bond Insurer.** Notwithstanding any other provision hereof, with respect to the Insured Bonds, if any: (a) the Bond Insurer for such Insured Bonds is an expressly intended third -party beneficiary hereof; and (b) unless and until such Bond Insurer has failed to make a payment due under the related Bond Insurance Policy, such Bond Insurer shall be deemed to be the Owner of each Insured Bond insured by such Bond Insurance Policy for all purposes other than: (i) except as otherwise provided in such Bond Insurance Policy, the right to receive payments of principal of, premium, if any, and interest on such Insured Bonds; and (ii) the right to consent to an amendment to this Ordinance that changes any of the matters described in paragraph (b) of the Section hereof entitled "Amendment of Ordinance."

**Section 33. Appointment and Duties of Paying Agent**. The Paying Agent is hereby appointed as paying agent, registrar and authenticating agent for the Bonds unless and until the City removes it as such and appoints a successor Paying Agent, in which event such successor shall automatically succeed to the duties of the Paying Agent hereunder and its predecessor shall immediately turn over all its records regarding the Bonds to such successor. The Paying Agent, by accepting its duties as such, agrees to perform all duties and to take all actions assigned to it hereunder in accordance with the terms hereof. The appointment and acceptance of the duties of Paying Agent hereunder may be affected through the execution of an agreement between the City and the Paying Agent.

**Section 34. Approval of Negotiated Sale of Bonds.** The Bonds shall be sold through a negotiated sale to the Original Purchaser.

**Section 35. Approval of Official Statement and Miscellaneous Documents**. The City Council hereby ratifies and approves the distribution and use of the Preliminary Official Statement; authorizes and directs the City staff to prepare a final Official Statement for use in connection with the sale of the Bonds; and for a period of one year following the adoption of this Ordinance, authorizes the Sale Delegate to execute the Sale Certificate, and authorizes and approves the execution of the Paying Agent Agreement, the Bond Purchase Agreement, the Continuing Disclosure Undertaking, and all documents and certificates necessary or desirable to effectuate the issuance of the Bonds and the transactions contemplated hereby; provided that the Preliminary Official Statement, the final Official Statement, the Paying Agent Agreement, and the Continuing Disclosure Undertaking shall be in substantially the forms thereof presented at the meeting at which this Ordinance is adopted or as otherwise available to the City Council, with such changes therein, if any, not inconsistent herewith, as are approved by the City (which, once executed by the appropriate City official, shall constitute conclusive evidence of approval of the City). The Mayor is hereby authorized and directed to execute the final Official Statement and the Mayor, the City Clerk and all other officers of the City are hereby authorized and directed to execute all of the foregoing documents and certificates necessary or desirable to effectuate the issuance of the Bonds and the transactions contemplated hereby and execution by the parties

thereto shall constitute the City Council's approval of such documents and certificates in the form so executed.

**Section 36. Ratification of Prior Actions.** All actions heretofore taken (not inconsistent with the provisions of this Ordinance) by the City Council or by the officers and employees of the City directed toward the issuance of the Bonds for the purposes herein set forth are hereby ratified, approved and confirmed.

**Section 37. Events Occurring on Days That Are Not Business Days**. Except as otherwise specifically provided herein with respect to a particular payment, event or action, if any payment to be made hereunder or any event or action to occur hereunder which, but for this Section, is to be made or is to occur on a day that is not a Business Day shall instead be made or occur on the next succeeding day that is a Business Day.

**Section 38. Captions.** The captions or headings in this Ordinance are for convenience only and shall not in any define, limit or describe the scope or intent of any provisions or sections of this Ordinance.

**Section 39. Ordinance Irrepealable.** After any of the Bonds have been issued, this Ordinance shall constitute a contract between the Owners and the City, and shall be and remain irrepealable until the Bonds and the interest accruing thereon shall have been fully paid, satisfied, and discharged, as herein provided.

**Section 40. Severability.** In the event any provision of this Ordinance shall be held illegal, invalid or unenforceable by any court of competent jurisdiction, such holding shall not invalidate, render unenforceable or otherwise affect any other provision hereof.

**Section 41. Repealer**. All orders, bylaws, ordinances, and resolutions of the City, or parts thereof, inconsistent or in conflict with this Ordinance, are hereby repealed to the extent only of such inconsistency or conflict.

**Section 42. Effective Date; Recording and Authentication.** This Ordinance shall be in full force and effect five days after final publication, following final passage. This Ordinance shall be recorded in a book kept for that purpose, shall be authenticated by the signatures of the Mayor and the City Clerk, and shall be published in accordance with law.

[Remainder of Page Left Intentionally Blank]

Introduced, read by title and passed on first reading this ____ day of _____ , 2016 by the City Council, City of Fountain, Colorado, signed by the Mayor, and ordered published by title with a summary written by the City Clerk, together with a statement that the Ordinance is available for public inspection and acquisition in the office of the City Clerk in the El Paso County Advertiser and News, a newspaper of general circulation in the City of Fountain.

[SEAL] CITY OF FOUNTAIN, COLORADO

Attest:

By: _____
City Clerk

By: _____
Mayor

INTRODUCED, READ BY TITLE ONLY, AND PASSED ON SECOND AND FINAL READING on the _____ day of _____, 2016, and ORDERED PUBLISHED BY TITLE ONLY in the El Paso County Advertiser and News, a newspaper of general circulation in the City of Fountain, Colorado, in accordance with the City Charter.

[SEAL] CITY OF FOUNTAIN, COLORADO

Attest:

By: _____
City Clerk

By: _____
Mayor

## APPENDIX A

## FORM OF THE BOND

**UNITED STATES OF AMERICA**

**CITY OF FOUNTAIN, COLORADO**
**acting by and through the**
**CITY OF FOUNTAIN ELECTRIC, WATER AND WASTEWATER UTILITY ENTERPRISE**

**WATER REVENUE REFUNDING BOND**
**SERIES 2016**

| INTEREST RATE: | MATURITY DATE: | ORIGINAL DATED DATE: | CUSIP: |
|---|---|---|---|
| _____% | _____ | _____ | _____ |

REGISTERED OWNER: CEDE & CO.

PRINCIPAL SUM:

DOLLARS

CITY OF FOUNTAIN, COLORADO, in the State of Colorado, a duly organized and validly existing City and political subdivision of the State of Colorado, acting by and through its City of Fountain, Electric, Water and Wastewater Utility Enterprise (the "City"), for value received, hereby promises to pay to the order of the registered owner named above or registered assigns, solely from the special funds as hereinafter set forth, on the maturity date stated above, the principal sum stated above, in lawful money of the United States of America, with interest thereon from the original dated date stated above, at the interest rate per annum stated above, payable on June 1 and December 1 of each year, commencing December 1, 2016, the principal of and premium, if any, and the final installment of interest on this bond being payable to the registered owner hereof upon presentation and surrender of this bond at the principal operations office of UMB Bank, n.a., as Paying Agent (the "Paying Agent"), in Denver, Colorado, or at such other location as identified by the Paying Agent, and the interest hereon (other than the final installment of interest hereon) to be paid by check or draft of the Paying Agent mailed on the Interest Payment Date to the registered owner hereof as of the close of business on the first day of the month (whether or not such day is a Business Day) in which such Interest Payment Date occurs, except that so long as Cede & Co. is the registered owner of this bond, the principal of, premium, if any, and interest on this Bond shall be paid by wire transfer to Cede & Co.

This Bond is one of an issue of Bonds of the City designated Water Revenue Refunding Bonds, Series 2016, issued in the principal amount of $_____ (the "Bonds"). The Bonds are being issued by the City for the purpose of refunding the Refunded Loan (defined in the Ordinance), pursuant to and in full conformity with the Constitution, the laws of the State of Colorado and an ordinance (the "Ordinance") duly adopted by the City prior to the issuance

hereof. All capitalized terms used but not otherwise defined herein shall have the meanings assigned to them in the Ordinance.

[INSERT REDEMPTION PROVISIONS]

At its option, to be exercised on or before the 45th day next preceding each sinking fund redemption date, the City may (i) deliver to the Paying Agent for cancellation any Bonds with the same maturity date as the Bonds subject to such sinking fund redemption and (ii) receive a credit in respect of its sinking fund redemption obligation for any Bonds with the same maturity date as the Bonds subject to such sinking fund redemption which prior to such date have been redeemed (otherwise than through the operation of the sinking fund) and cancelled by the Paying Agent and not theretofore applied as a credit against any sinking fund redemption obligation. Each Bond so delivered or previously redeemed shall be credited by the Paying Agent at the principal amount thereof to the obligation of the City on such sinking fund redemption date, and the principal amount of Bonds to be redeemed by operation of such sinking fund on such date shall be accordingly reduced.

Notice of any redemption of Bonds shall be given by the Paying Agent in the name of the City by sending a copy of such notice by first-class, postage prepaid mail or by electronic means to DTC or its successor, not less than thirty (30) days prior to the redemption date, to the Owner of each Bond being redeemed. Such notice shall specify the number or numbers of the Bonds so to be redeemed (if redemption shall be in part) and the redemption date. If any Bond shall have been duly called for redemption and if, on or before the redemption date, there shall have been deposited with the Paying Agent in accordance with this Ordinance funds sufficient to pay the redemption price of such Bond on the redemption date, then such Bond shall become due and payable at such redemption date, and from and after such date interest will cease to accrue thereon. Failure to deliver any redemption notice or any defect in any redemption notice shall not affect the validity of the proceeding for the redemption of Bonds with respect to which such failure or defect did not occur. Any Bond redeemed prior to its maturity by prior redemption or otherwise shall not be reissued and shall be cancelled.

The Paying Agent shall maintain registration books in which the ownership, transfer and exchange of the Bonds shall be recorded. The person in whose name this Bond shall be registered on such registration books shall be deemed to be the absolute owner hereof for all purposes, whether or not payment on this Bond shall be overdue, and neither the City nor the Paying Agent shall be affected by any notice or other information to the contrary. This Bond may be transferred or exchanged, at the principal operations office of the Paying Agent, or at such other location as identified by the Paying Agent, for a like aggregate principal amount of the Bonds of other authorized denominations ($5,000 or any integral multiple thereof) of the same maturity and interest rate, upon payment by the transferee of a transfer fee, any tax or governmental charge required to be paid with respect to such transfer or exchange and any cost of printing bonds in connection therewith.

The principal of and interest on this Bond are payable only out of: (a) a special account of the City designated as the Bond Account, into which the City covenants and agrees to deposit, from certain fees, charges and revenues derived from the operation of the water facilities comprising the City's Electric, Water and Wastewater Utility Enterprise after deduction of

operations and maintenance costs (the "Net Revenues"), amounts sufficient to pay the principal of and interest on the Bonds when the same become due and payable and (b) if necessary, a special account designated as the Reserve Account, all as more particularly set forth in the Ordinance. The Bonds of this issue constitute an irrevocable lien, but not necessarily an exclusive such lien, upon the Net Revenues on parity with the City's outstanding Authority Bonds, Series 2015 Bonds and Water Rights Notes. The City is authorized to pledge and grant additional liens, on parity with the lien for the payment of the Bonds, the Authority Bonds, the Series 2015 Bonds and Water Rights Notes on the Net Revenues upon satisfaction of certain conditions set forth in the Ordinance.

This Bond is issued pursuant to and in accordance with the Constitution of the State of Colorado, Section 11-57-210, C.R.S., Part 1 of Article 56 of Title 11, C.R.S., and all other laws of the State of Colorado thereunto enabling. This Bond, including the interest hereon, is payable solely from and secured solely by the special funds provided in the Ordinance and shall not constitute a debt or an indebtedness of the City within the meaning of any constitutional or statutory limitation, nor shall this Bond be considered or held to be a general obligation of the City.

THE ORDINANCE CONSTITUTES THE CONTRACT BETWEEN THE REGISTERED OWNER OF THIS BOND AND THE CITY. THIS BOND IS ONLY EVIDENCE OF SUCH CONTRACT AND, AS SUCH, IS SUBJECT IN ALL RESPECTS TO THE TERMS OF THE ORDINANCE, WHICH SUPERSEDES ANY INCONSISTENT STATEMENT IN THIS BOND.

The City agrees with the owner of this Bond and with each and every person who may become the owner hereof, that it will keep and perform all the covenants and agreements contained in the Ordinance.

The Ordinance may be amended or supplemented from time-to-time with or without the consent of the registered owners of the Bonds as provided in the Ordinance.

It is hereby certified that all conditions, acts and things required by the constitution and laws of the State of Colorado, and the ordinances of the City, to exist, to happen and to be performed, precedent to and in the issuance of this Bond, exist, have happened and have been performed, and that the Bonds do not exceed any limitations prescribed by said Constitution or laws of the State of Colorado, or the Charter, ordinances, or resolutions of the City.

This Bond shall not be entitled to any benefit under the Ordinance, or become valid or obligatory for any purpose, until the Paying Agent shall have signed the certificate of authentication hereon.

IN WITNESS WHEREOF, City of Fountain, Colorado, acting by and through its Electric, Water and Wastewater Utility Enterprise, has caused this Bond to be signed in the name and on behalf of the City with the manual or facsimile signature of the Mayor, to be sealed with the seal of the City or a facsimile thereof and to be attested by the manual or facsimile signature of the City Clerk.

[MANUAL OR FACSIMILE SEAL]

CITY OF FOUNTAIN, COLORADO

By (Manual or Facsimile Signature)
Mayor

ATTEST:

By (Manual or Facsimile Signature)
City Clerk

## CERTIFICATE OF AUTHENTICATION

This is one of the Bonds described in the within-mentioned Ordinance.

Date of Authentication: _____.

UMB Bank, n.a., as Paying Agent

By _____
_____, Authorized Representative

[OPINION OF BOND COUNSEL TO BE INSERTED IN THIS PLACE]

[STATEMENT OF INSURANCE TO BE INSERTED IN THIS PLACE]

CERTIFICATE OF TRANSFER

FOR VALUE RECEIVED, _____, the undersigned, hereby sells, assigns and transfers unto _____ (Tax Identification or Social Security No. _____) the within Bond and all rights thereunder, and hereby irrevocably constitutes and appoints _____ attorney to transfer the within Bond on the books kept for registration thereof, with full power of substitution in the premises.

Dated: _____

_____

NOTICE: The signature to this assignment must correspond with the name as it appears upon the face of the within Bond in every particular, without alteration or enlargement or any change whatever.

Signature Guaranteed:

_____

NOTICE: Signature must be guaranteed by a member firm of the New York Stock Exchange or a commercial bank or trust company.

Transfer Fee May Be Required

# Regular City Council Meeting

**New Business – 9C**

***Creating a Recreation Facility Committee***

*May 24, 2016*

## *Summary Information*

Title:

**Resolution 16-017, A Resolution of the City of Fountain Creating the Recreation Facility Committee, Providing for its Duties and Responsibilities and Authorizing the Appointment of its Members**

| | |
|---|---|
| Initiator : Silvia Huffman, City Clerk | ☒ Council Action |
| Presenter: Scott Trainor, City Manager | ☐ Council Information |
| Legal Review: ☐ Yes ☒ No | ☐ Report to Council |

Summary Overview and List of Attachments:

The purpose of this action item is to create a Recreation Facility Committee (RFC) for the purpose of establishing a strategy for a recreation facility within the City of Fountain.

Attachments: Resolution #16-017

## *Background Information*

On February 8, 2016 Mayor Ortega requested the Park Board develop a strategy for a recreation facility. The Park Board would like to create this sub-committee to bring in stake holders and the community for their input.

The City of Fountain has no formal recreation program. There are several independent providers of recreation programs, including the YMCA, Fountain Valley Baseball, AYSO, Widefield Recreation, and various Club teams. The attached resolution creates a Recreation Facility Committee to help move the community forward. It would be a group of interested citizens and partner agencies that would be asked to come together to address possibilities.

Potential Membership:

- Interested/Engaged citizens who are committed to spending time addressing this question.
- School Districts 8 and 3
- Large Recreation providers (AYSO, YMCA, FVBA, etc.)
- Park Board Members
- Representative of the Council and Planning Commission

Specific Goals:

The goals set forth by the City Council for the Recreation Committee would be:

1. An evaluation/assessment on the overall feasibility of a recreation facility
2. The types of amenities desired for the facility and estimated costs
3. Potential funding mechanisms
4. The approach to obtain public feedback and support for the facility and for funding options
5. The evaluation of potential partnerships for the facility
6. Timeline for the strategy

   The committee will report to City Council throughout the process.

## *Recommendation*

| |
|---|
| The recommendation is to approve the attached Resolution and to begin the process of bringing together members of the Recreation Facility Committee. |
| ***Proposed Motion*** |
| "I move that we approve Resolution #16-017 |

_____

CM Review

City of Fountain
Pure Colorado

Fountain
All-America City
2002

# RESOLUTION 16-017

## A RESOLUTION OF THE CITY OF FOUNTAIN CREATING THE RECREATION FACILITY COMMITTEE, PROVIDING FOR ITS DUTIES AND RESPONSIBILITIES AND AUTHORIZING THE APPOINTMENT OF ITS MEMBERS

## RECITALS

A. The City of Fountain does not currently operate a formal recreation facility.

B. Many residents of the community are underserved by not having access to recreational programs, facilities and resources.

C. A City recreation facility would expand recreation opportunities to residents through program development, participation and community wide special events.

D. In response to residents desires to expand recreational opportunities in the community, the City Council desires to create an advisory recreation facility committee to develop a feasibility study, propose amenities, explore funding and partnerships, elicit public feedback, create a timeline and make recommendations to the City Council.

**NOW THEREFORE BE IT RESOLVED BY THE CITY COUNCIL OF THE CITY OF FOUNTAIN:**

**Section l.** Recital Incorporation. The recitals set forth in this resolution are incorporated in support of the resolving provisions of this resolution.

**Section 2.** Establishment of Committee. The Recreation Facility Committee (the "RFC") is hereby created by the City Council. The Committee shall serve without compensation except for expenses as authorized under section 4.3 of the City of Fountain Home Rule Charter (the "Charter") and shall be subject to and comply with Sections 4.2 and 4.3 of the Charter, all of the applicable provisions of the Charter, the applicable provisions of the Fountain Municipal Code and any other applicable law.

**Section 3.** Term. The RFC shall serve until it has completed all recommendations to the City Council. As the Committee is ad hoc and does not have a fixed term, overlapping terms for RFC members are not established

**Section 4.** Duties and Responsibilities. The RFC shall gather existing information, review previous recreation plans, tour area community centers and programs, assess community recreational needs and desires, analyze gaps between current recreational opportunities and the needs/desires of the community, develop a conceptual recreation plan for the community, and provide a report of its recommendations to the City Council. The RFC shall hold meetings as it determines are appropriate to accomplish its duties and responsibilities.

**Section 5.** Membership. The RFC shall consist of nine (9) members who are residents of the City. The City Council shall appoint members to the RFC. The City Council may add members to the RFC if it determines the addition of such members is appropriate or appoint "Ex Officio" members who are not residents of the City.

**Section 6.** Chair and Vice Chair. The RFC shall elect a Chair and Vice Chair from among its members.

**Section 7.** Public Meetings. All meetings of the RFC shall be public meetings, except as provided in the Colorado Open Meetings Act, as adopted under Section 2.1 (c) of the Charter.

**Section 8.** Rules of Procedure. The RFC may adopt such rules of procedure for its meetings as it determines are appropriate.

**Section 9.** Reports. The RFC may make interim reports to the City Council and the City Manager as the RFC determines appropriate. Upon the conclusion of its duties, the RFC shall make a final report to the City Council and to the City Manager. The RFC shall prepare agendas for its meetings and keep minutes of its meetings.

**Section 10.** Support. The City Clerk's office shall provide clerical support to the RFC.

Done this _____ day of _____ 2014.

_____
Gabriel P. Ortega, Mayor

ATTEST:

_____
Silvia Huffman, City Clerk